RS/6000 44P Series Model 270

Service Guide

SA38-0572-02

Third Edition (September 2001)

Before using this information and the product it supports, read the information in “Safety Notices” on page xi, Appendix A, “Environmental Notices,” on page 283, and Appendix B, “Notices,” on page 285.

A reader’s comment form is provided at the back of this publication. If the form has been removed, address comments to Information Development, Department H6DS-905-6C006, 11501 Burnet Road, Austin, Texas 78758-3493. To send comments electronically, use this commercial internet address: aix6kpub@austin.ibm.com. Any information that you supply may be used without incurring any obligation to you.

International Business Machines Corporation, 2000, 2001. All rights reserved.

Note to U.S. Government Users Restricted Rights--Use, duplication or disclosure restrictions by GSA ADP Schedule Contract with IBM Corp.

Contents

Safety Notices xi
Electrical Safety xii
Laser Safety Information xii

Data Integrity and Verification xv

About This Book xvii
ISO 9000 xvii
Online Publications xvii
Related Publications xvii
Trademarks xviii

Chapter 1. Reference Information 1
System Unit Locations 1
Front View with Media Door Removed 1
Rear View 2
I/O Board Component Locations 4
SCSI IDs and Bay Locations 6
System Board Locations 7
Memory Card Locations 7
Operator Panel 8
System Cables 9
Location Codes 9
Physical Location Codes 9
Location Code Format 9
AIX Location Codes 10
AIX and Physical Location Code Reference Table 13
Specifications 17
Dimensions 17
Weight 18
Operating Environment - Class B 18
Power Source Loading 18
Power Requirements 18
Power Factor 18
Operating Voltage 18
Heat Output (Maximum) 18
Acoustics 18
Power Cables 19
Service Inspection Guide 20

Chapter 2. Diagnostics Overview 21
Maintenance Analysis Procedures (MAPs) 21
Checkpoints 22
FRU Isolation 23
Electronic Service Agent for the RS/6000 23
Using the Service Processor and Electronic Service Agent Features 24
Service Processor 24

Electronic Service Agent 25

Chapter 3. Maintenance Analysis Procedures (MAPs) 27
Quick Entry MAP 27
Quick Entry MAP Table of Contents 28
MAP 1020: Problem Determination 34
Purpose of This MAP. 34
Step 1020-1. 35
Step 1020-2. 37
Step 1020-3. 38
Step 1020-4. 38
MAP 1240: Memory Problem Resolution 39
Purpose of This MAP. 39
General Memory Information 39
Step 1240-1. 40
Step 1240-2. 40
Step 1240-3. 41
Step 1240-4. 41
Step 1240-5. 41
Step 1240-6. 42
Step 1240-7. 42
Step 1240-8. 43
Step 1240-9. 43
Step 1240-10 44
Step 1240-11 44
MAP 1520: Power. 45
Step 1520-1. 46
Step 1520-2. 46
Step 1520-3. 46
Step 1520-4. 47
Step 1520-5. 47
Step 1520-6. 47
Step 1520-7. 48
Step 1520-8. 49
MAP 1540: Minimum Configuration 50
Purpose of this MAP 51
Step 1540-1. 51
Step 1540-2. 52
Step 1540-3. 53
Step 1540-4. 54
Step 1540-5. 54
Step 1540-6. 55
Step 1540-7. 55
Step 1540-8. 56
Step 1540-9. 57
Step 1540-10 58
Step 1540-11 59
Step 1540-12 60
Step 1540-13 61
Step 1540-14 62

Step 1540-15 63
Step 1540-16 64
Step 1540-17 65
Step 1540-18 66
Step 1540-19 66
Step 1540-20 67
Step 1540-21 67
Step 1540-22 67
Step 1540-23 68
Step 1540-24 68
Step 1540-25 69
Step 1540-26 69
Step 1540-27 70

Chapter 4. Checkpoints 71
Service Processor Checkpoints 71
Firmware Checkpoints 75
Boot Problems/Concerns 89

Chapter 5. Error Code to FRU Index 93
Considerations for Using this Chapter 93
Performing Slow Boot 93
General Considerations 93
Firmware/POST Error Codes 94
Memory Problem Determination Bits 142
Bus SRN to FRU Reference Table 143
Typical Boot Sequence. 144

Chapter 6. Loading the System Diagnostics 147
Performing Slow Boot 147
Standalone Diagnostics 147
Online Diagnostics 147
Default Boot List and Service Mode Boot List 148

Chapter 7. Using the Service Processor 149
Service Processor Menus 151
Service Processor Menu Inactivity 151
Accessing Service Processor Menus Locally 151
Accessing Service Processor Menus Remotely 151
General User Menu 152
Privileged User Menus 153
Main Menu. 153
Service Processor Setup Menu 154
Passwords 155
Serial Port Snoop Setup Menu 158
System Power Control Menu 159
System Information Menu 164
Language Selection Menu 167
Call-In/Call-Out Setup Menu 167
Modem Configuration Menu 168

Serial Port Selection Menu 168
Serial Port Speed Setup Menu 169
Telephone Number Setup Menu 169
Call-Out Policy Setup Menu 171
Customer Account Setup Menu 172
Call-Out Test 172
Service Processor Functions 173
System Power-On Methods 175
Service Processor Call-In Security 176
Service Processor Reboot/Restart Recovery 176
Boot (IPL) Speed 176
Failure During Boot Process 176
Failure During Normal System Operation 176
Service Processor Reboot/Restart Policy Controls 177
Processor Boot-Time Deconfiguration (CPU Repeat Gard) 177
Processor Run-Time Deconfiguration (CPU-Gard) 177
Memory Boot-Time Deconfiguration (Memory Repeat Gard) 178
Service Processor System Monitoring - Surveillance 179
System Firmware Surveillance 179
Operating System Surveillance 179
Call Out 180
Console Mirroring 181
System Configuration for Console Mirroring 181
Service Processor Firmware Updates 181
Service Processor Error Log 182
System POST Errors 182
Service Processor Operational Phases 183
Pre-Standby Phase 183
Standby Phase 183
Bring-Up Phase 184
Run-time Phase 184
Service Processor Procedures in Service Mode 185

Chapter 8. System Management Services 187
Graphical System Management Services 187
Config 190
Multiboot 191
Utilities 193
Password 195
Spin Delay 199
Error Log 200
RIPL 201
Set Address 202
Ping 203
Config 205
SCSI ID 206
Firmware Update 207
Firmware Recovery 207
Text-Based System Management Services 209
Display Configuration 210

Multiboot Menu 210
Select Boot Device 211
Configure Nth Boot Device 213
Utilities 214
Set Password and Unattended Start Mode 215
SCSI Spin Up 216
Display Error Log 216
Remote Initial Program Load Setup 216
Change SCSI ID 220
Update System or Service Processor Firmware 220
Firmware Recovery 221
Select Console 221
Select Language 221
Open Firmware 222

Chapter 9. Removal and Replacement Procedures 223
Handling Static-Sensitive Devices 224
Stopping the System Unit 224
Procedure List 224
Covers 226
Removal of Covers 226
Replacement of Covers 230
Processor and Memory Card Cover 231
Removal of Processor and Memory Card Cover 231
Replacement of Processor and Memory Card Cover 231
Memory Cards 232
Removal of Memory Cards 232
Replacement of Memory Cards 233
Memory Modules. 236
Removal of Memory Modules 236
Replacement of Memory Modules 238
Processor Card 239
Removal of Processor Card 239
Replacement of Processor Card. 240
Adapters 242
Removal of Adapters 242
Replacement of Adapters 242
Internal Drives 244
Checklist For Handling Drives 244
Disk Drives 245
Removal of Disk Drives 245
Replacement of Disk Drives 246
Configuration or Unconfiguration of Disk Drives 247
Configuration of Disk Drives 247
Unconfiguration of Disk Drives 247
Battery Replacement 248
System Board. 252
Removal of System Board 252
Replacement of System Board 253
I/O Board 254

Removal of I/O Board 254
Replacement of I/O Board 256
Power Supply 257
Removal of Power Supply 257
Replacement of Power Supply 259
Operator Panel 260
Removal of Operator Panel 260
Replacement of Operator Panel 261
Operator Panel Vital Product Data (VPD) Update Procedure 262
CEC Fan 264
Removal of CEC Fan 264
Replacement of CEC Fan 264
I/O Fan 265
Removal of I/O Fan 265
Replacement of I/O Fan 265
Disk Drive Cage 266
Removal of Disk Drive Cage 266
Replacement of Disk Drive Cage 267
CD-ROM Drive, Tape Drive, Diskette Drive 268
Removal of Media Drives 268
Replacement of Media Drives 268

Chapter 10. Parts Information 271
Keyboards and Mouse 276
Keyboards and Mouse (Black) 278
Power Cables 280

Appendix A. Environmental Notices 283
Product Recycling and Disposal 283
Environmental Design 283
Unit Emissions 283

Appendix B. Notices 285

Appendix C. Firmware Updates 287
Checking the Current Firmware Levels 287
Updating System Firmware 287

Appendix D. Service Processor Setup and Test 289
Service Processor Setup Checklist 289
Testing the Setup 289
Testing Call-In 290
Testing Call-Out 290
Serial Port Configuration 291

Appendix E. Modem Configurations 293
Sample Modem Configuration Files 293
Configuration File Selection 293
Examples for Using the Generic Sample Modem Configuration Files 295
Customizing the Modem Configuration Files 295

IBM 7852-400 DIP Switch Settings 296
Xon/Xoff Modems 296
Ring Detection 297
Terminal Emulators 297
Recovery Procedures 297
Transfer of a Modem Session 297
Recovery Strategy 298
Prevention Strategy 299
Modem Configuration Samples 300

Appendix F. Interpreting Firmware Error Codes 315

Index 321

Safety Notices

A *danger* notice indicates the presence of a hazard that has the potential of causing death or serious personal injury. Danger notices appear on the following pages:

- xii
- 45
- 45
- 223
- 257

A *caution* notice indicates the presence of a hazard that has the potential of causing moderate or minor personal injury. Caution notices appear on the following pages:

- xii
- xiii
- 45
- 223
- 248
- 268

Note: For a translation of these notices, see the *System Unit Safety Information* manual, order number SA23-2652.

Electrical Safety

Observe the following safety instructions any time you are connecting or disconnecting devices attached to the workstation.

DANGER

An electrical outlet that is not correctly wired could place hazardous voltage on metal parts of the system or the devices that attach to the system. It is the responsibility of the customer to ensure that the outlet is correctly wired and grounded to prevent an electrical shock.

Before installing or removing signal cables, ensure that the power cables for the system unit and all attached devices are unplugged.

When adding or removing any additional devices to or from the system, ensure that the power cables for those devices are unplugged before the signal cables are connected. If possible, disconnect all power cables from the existing system before you add a device.

Use one hand, when possible, to connect or disconnect signal cables to prevent a possible shock from touching two surfaces with different electrical potentials.

During an electrical storm, do not connect cables for display stations, printers, telephones, or station protectors for communications lines.
D05

CAUTION:
This product is equipped with a three-wire power cable and plug for the user's safety. Use this power cable with a properly grounded electrical outlet to avoid electrical shock.
C01

DANGER

To prevent electrical shock hazard, disconnect all power cables from the electrical outlet before relocating the system.
D01

Laser Safety Information

The optical drive in this system unit is a laser product. The optical drive has a label that identifies its classification. The label, located on the drive, is shown below.

CLASS 1 LASER PRODUCT
LASER KLASSE 1
LUOKAN 1 LASERLAITE
APPAREIL À LASER DE CLASSE 1
IEC 825:1984 CENELEC EN 60 825:1991

The optical drive in this system unit is certified in the U.S. to conform to the requirements of the Department of Health and Human Services 21 Code of Federal Regulations (DHHS 21 CFR) Subchapter J for Class 1 laser products. Elsewhere, the drive is certified to conform to the requirements of the International Electrotechnical Commission (IEC) 825 (1st edition 1984) and CENELEC EN 60 825:1991 for Class 1 laser products.

CAUTION:
A class 3 laser is contained in the device. Do not attempt to operate the drive while it is disassembled. Do not attempt to open the covers of the drive as it is not serviceable and is to be replaced as a unit.

Class 1 laser products are not considered to be hazardous. The optical drive contains internally a Class 3B gallium-arsenide laser that is nominally 30 milliwatts at 830 nanometers. The design incorporates a combination of enclosures, electronics, and redundant interlocks such that there is no exposure to laser radiation above a Class 1 level during normal operation, user maintenance, or servicing conditions.

Data Integrity and Verification

IBM computer systems contain mechanisms designed to reduce the possibility of undetected data corruption or loss. This risk, however, cannot be eliminated. Users who experience unplanned outages, system failures, power fluctuations or outages, or component failures must verify the accuracy of operations performed and data saved or transmitted by the system at or near the time of the outage or failure. In addition, users must establish procedures to ensure that there is independent data verification before relying on such data in sensitive or critical operations. Users should periodically check the IBM support websites for updated information and fixes applicable to the system and related software.

About This Book

This book provides maintenance information that is specific to the RS/6000 44P Series Model 270, as well as to adapters and attached devices that do not have their own service information. In this book, the RS/6000 44P Series Model 270 is hereafter referred to as the ″system″ or the ″server.″

This book also contains maintenance analysis procedures (MAPs) that are not common to other systems. MAPs that are common to all systems are contained in the *RS/6000 and @server pSeries Diagnostics Information for Multiple Bus Systems*.

This book is used by the service technician to repair system failures. This book assumes that the service technician has had training on the system unit.

ISO 9000

ISO 9000 registered quality systems were used in the development and manufacturing of this product.

Online Publications

RS/6000 publications are available online. To access the online books, visit our Web site at: http://www.rs6000.ibm.com/resource/hardware_docs/

Related Publications

The following publications provide additional information about your system unit:

- The *System Unit Safety Information Guide,* order number SA23-2652, contains translations of safety information used throughout this book.
- The *44P Series Model 270 User's Guide*, order number SA38-0573-02, contains information on how to use the system, use diagnostics, use service aids, and verify system operations..
- The *RS/6000 and @server pSeries Diagnostics Information for Multiple Bus Systems*, order number SA38-0509, contains common diagnostic procedures, error codes, service request numbers, and failing function codes. This manual is intended for trained service technicians.
- The *RS/6000 and @server pSeries Adapters, Devices, and Cable Information for Multiple Bus Systems*, order number SA38-0516, contains information about adapters, devices, and cables for your system. This manual is intended to supplement the service information found in the *RS/6000 and @server pSeries Diagnostics Information for Multiple Bus Systems*.
- The *Site and Hardware Planning Information* order number SA38-0508, contains information to help you plan your installation.

Trademarks

The following terms are trademarks of International Business Machines Corporation in the United States, other countries, or both:

- AIX
- IBM
- e (logo)
- PowerPC
- PowerPC Reference Platform
- pSeries
- RS/6000

Other company, product, and service names may be trademarks or service marks of others.

Chapter 1. Reference Information

This chapter provides an overview of the system, including system unit locations, location codes, and environmental specifications.

System Unit Locations

Front View with Media Door Removed

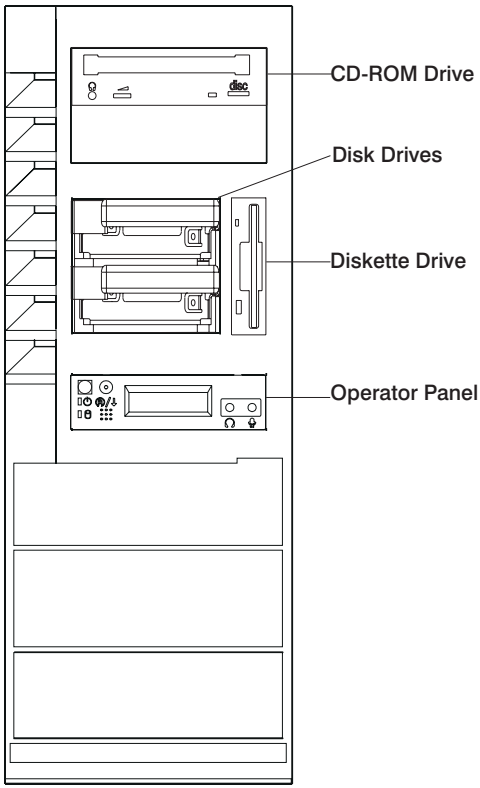

Rear View

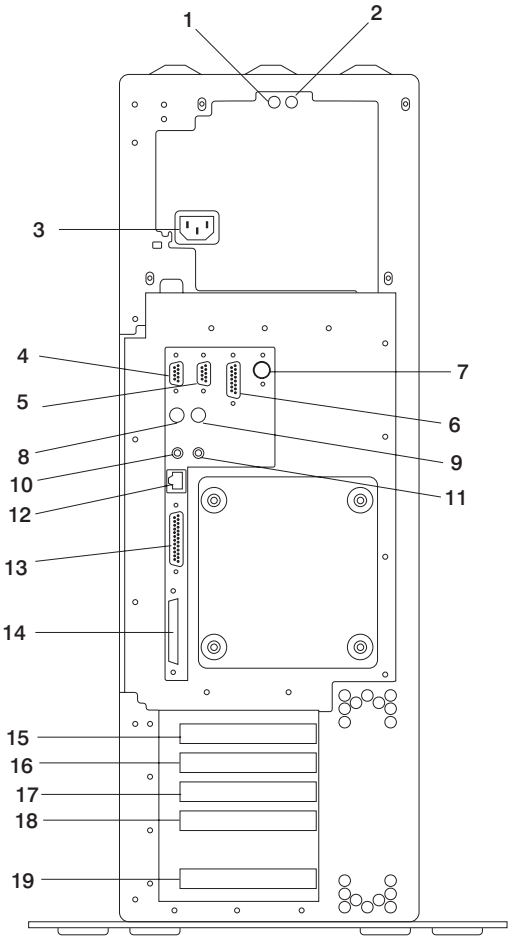

1	Power Supply LED
2	Power Supply Test Switch
3	Power Connector
4	Serial Connector S1
5	Serial Connector S2
6	AUI Ethernet Connector
7	Tablet Connector
8	Keyboard Connector
9	Mouse Connector
10	Audio Line Out
11	Audio Line In
12	RJ45 Ethernet Connector
13	Parallel Connector
14	External SCSI Connector
15	PCI Slot 5 (32-bit)
16	PCI Slot 4 (32-bit)
17	PCI Slot 3 (32-bit)
18	PCI Slot 2 (64-bit)
19	PCI Slot 1 (64-bit)

I/O Board Component Locations

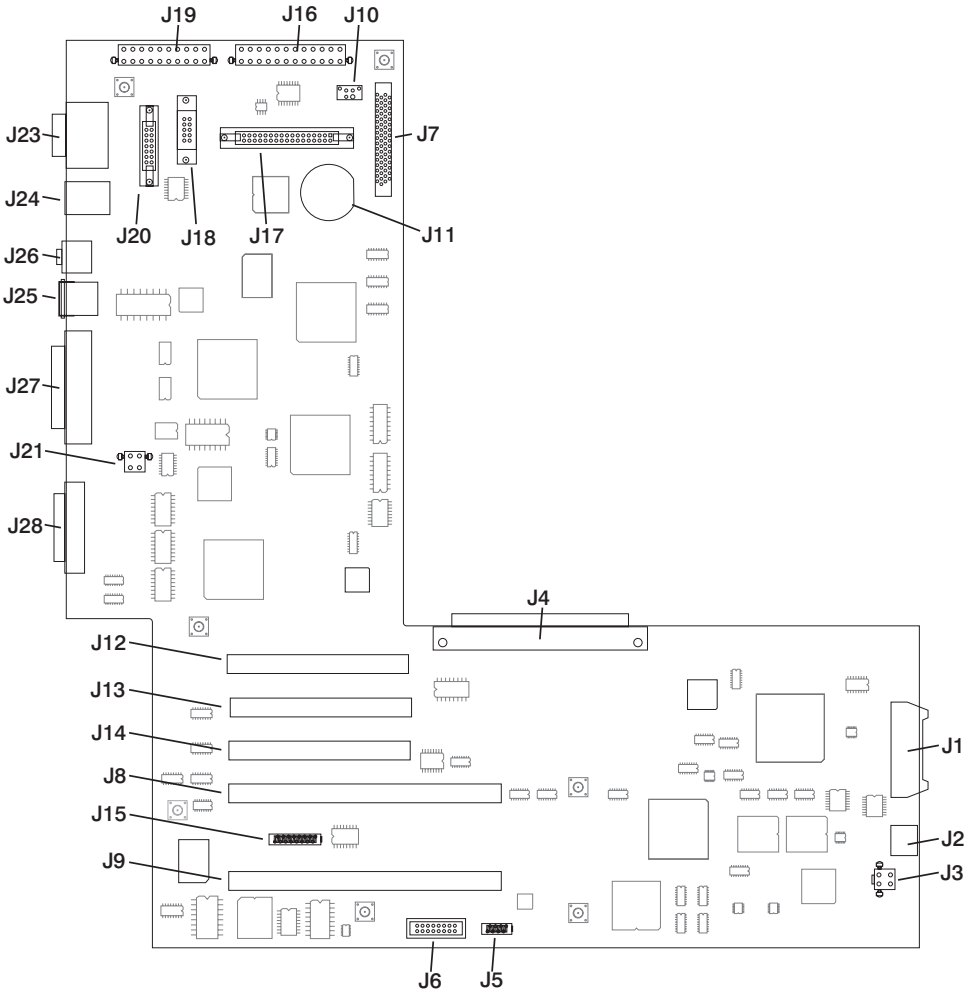

J1	Operator panel power connector
J2	Operator panel audio connector
J3	I/O fan connector
J4	I/O board connector to system board
J5	VPD module connector
J6	ESP external connector
J7	Internal SCSI connector
J8, J9	64-bit PCI connectors
J10	CD-ROM audio connector
J11	Battery Socket
J12, J13, J14	32-bit PCI connectors
J15	Service processor external connector
J16	Power connector
J17	Diskette drive connector
J18	Tablet connector
J19	Power connector
J20	AUI Ethernet connector
J21	CEC fan connector
J23	Serial port connectors
J24	Keyboard/Mouse connector
J25	RJ45 Ethernet connector
J26	Audio in/out
J27	Parallel port connector
J28	External SCSI connector

SCSI IDs and Bay Locations

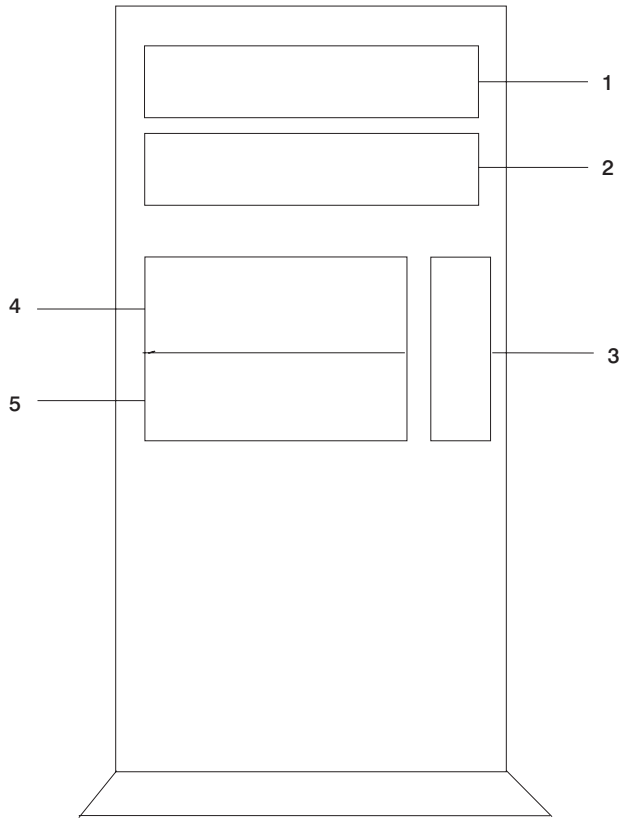

Index	Bay Location	Drive Name	SCSI ID
1	Bay D2	CD-ROM	SCSI ID 1
2	Bay D3	Media device	SCSI ID 0
3	Bay D1	Diskette drive	Non-SCSI
4	Bay D4	Disk drive	SCSI ID 9
5	Bay D5	Disk drive	SCSI ID 8

Note: The SCSI bus IDs listed are the recommended values. The SCSI IDs shown for media devices indicate how the devics are set when shipped from the factory. Field installations might not comply with these recommendations.

System Board Locations

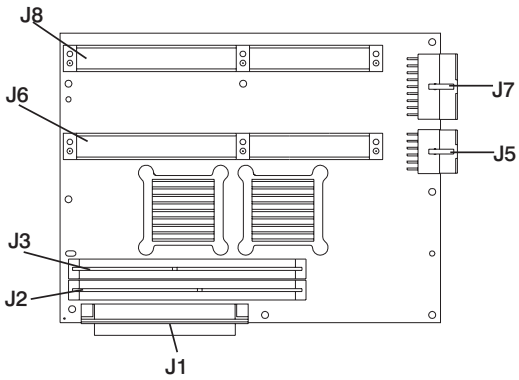

J1	System board connector to I/O board
J2	Memory card 2 connector
J3	Memory card 1 connector
J5	Power supply connector
J6	Processor card connector #1 (Primary)
J7	Power supply connector
J8	Processor card connector #2

Memory Card Locations

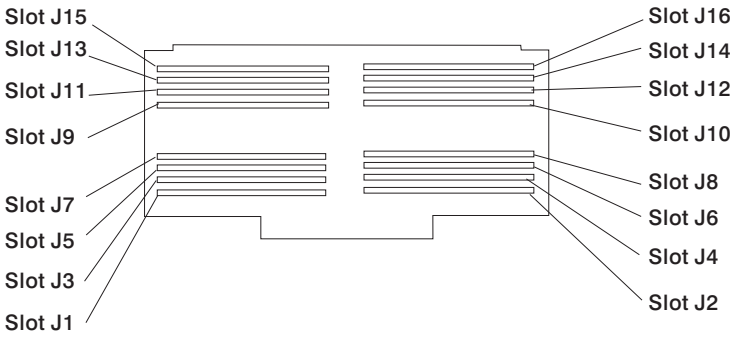

Note: Memory modules must be installed in pairs and in the correct slot configuration. (Slots J1 and J2, J3 and J4, J5 and J6, and so on.)

Operator Panel

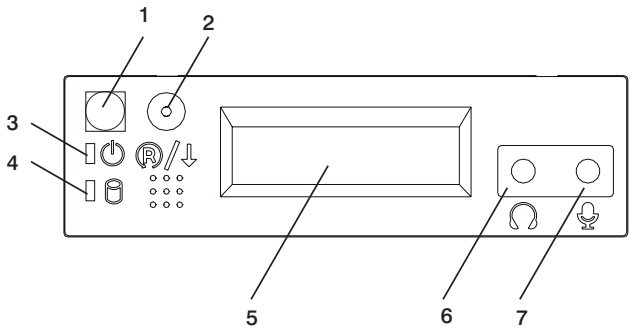

1	Power-On Switch
2	Reset Switch
3	Power-On LED
4	Disk Drive Activity LED
5	Display
6	Headset Receptacle
7	Microphone Receptacle

System Cables

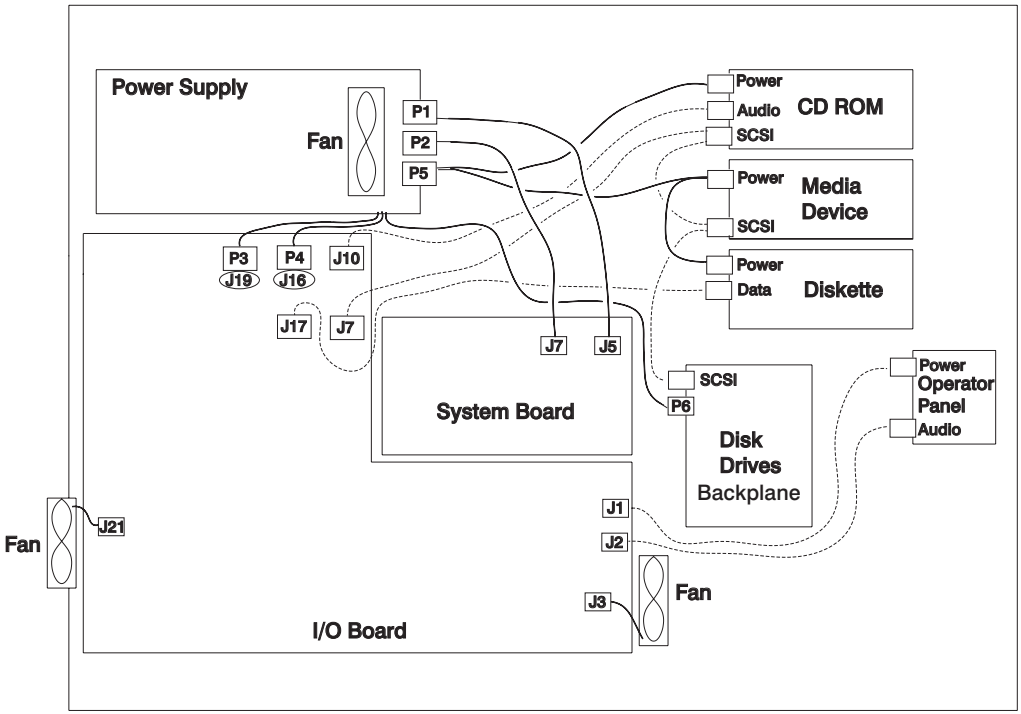

Note: P3 cable goes into designated socket J19. P4 cable goes into designated socket J16.

Location Codes

This system unit uses physical location codes in conjunction with AIX location codes to provide mapping of the failing field replaceable units. The location codes are produced by the system unit's firmware and AIX.

Physical Location Codes

Physical location codes provide a mapping of logical functions in a platform (or expansion sites for logical functions, such as connectors or ports) to their specific locations within the physical structure of the platform.

Location Code Format

The location code is an alphanumeric string of variable length, consisting of a series of location identifiers, separated by a dash (-), slash (/), or a pound sign (#) character. The series is hierarchical; that is, each location identifier in the string is a physical or logical child of the one preceding it.

- The - (dash) separator character represents a normal structural relationship where the child is a separate physical package and it plugs into (or is connected to) the parent. For example, P1-C1 is a processor card (C1) plugged into a planar (P1), or P1-M1 is a memory card (M1) plugged into a planar (P1).
- The / (slash) separator character separates the base location code of a function from any extended location information. A group of logical devices can have the same base location code because they are all on the same physical package, but may require extended location information to describe the connectors they support. For example, P2/S1 describes the location of the serial port 1 controller and its connector (S1), which is located on planar P2 (its base location code), but the / indicates that further devices can be connected to it at the external S1 serial connector. The keyboard controller and its connector likewise have location code P2/K1, which means they have the same base location code (P2) as serial port 1, but a different external connector. In contrast, the location code P2-K1 actually points to the device connected to connector K1; that is, the keyboard. The location code P2/Z1 indicates an integrated SCSI controller which drives connector Z1, while location codes of P2-Z1-... point to the actual SCSI bus and devices.
- The # (pound sign) separator character indicates a cable connection between a connector and parent.

The following are examples:

- P1-C1 identifies processor card C1 plugged into planar P1.
- P1-M1 identifies memory card M1 plugged into planar P1.
- P2/S1 identifies serial port 1 controller on I/O board P2, or the connector for serial port 1.
- P1-K1 identifies a keyboard attached to connector K1 on planar P1.
- P2/Z1 identifies an integrated SCSI controller on planar P2 which drives connector Z1.
- P2-Z1-... points to the actual SCSI bus and devices attached to Z1.

The . (period) identifies sub locations (DIMMs on a memory card, or SCSI addresses). The following are examples:

- P1-M1.4 identifies memory DIMM 4 on memory card 1 plugged into planar P1.
- P1-C1.1 identifies processor 1 on processor card 1 plugged into planar P1.
- P2-Z1-A3.1 identifies a SCSI device with SCSI address of LUN 1 at SCSI ID 3 attached to SCSI bus 1, which is integrated on planar P2.
- P2.1 identifies a riser card plugged into planar P2.

AIX Location Codes

The basic formats of the AIX location codes are as follows:

- For non-SCSI devices/drives:
  - AB-CD-EF-GH
- For SCSI devices/drives:
  - AB-CD-EF-G,H

For planars, cards, and non-SCSI devices, the location code is defined as follows:

```
AB-CD-EF-GH
  |  |  |  |
  |  |  |  Device/FRU/Port ID
  |  |  Connector ID
  |  devfunc Number, Adapter Number or Physical Location
  Bus Type or PCI Parent Bus
```

- The AB value identifies a bus type or PCI parent bus as assigned by the firmware.
- The CD value identifies adapter number, the adapter's devfunc number, or physical location. The devfunc number is defined as the PCI device number times 8, plus the function number.
- The EF value identifies a connector.
- The GH value identifies a port, address, device, or FRU.

Adapters and cards are identified only with AB-CD.

The possible values for AB are:

00	Processor bus
01	ISA bus
02	EISA bus
03	MCA bus
04	PCI bus used in the case where the PCI bus cannot be identified
05	PCMCIA buses
xy	For PCI adapters where x is equal to or greater than 1. The x and y are characters in the range of 0-9, A-H, J-N, P-Z (O, I, and lower case are omitted) and are equal to the parent bus's ″ibm, aix-location″ open firmware property.

The possible values for CD depend on the adapter/card:

- For pluggable PCI adapters/cards, CD is the device's devfunc number (PCI device number times 8, plus the function number). The C and D are characters in the range of 0-9, and A-F (hex numbers). Location codes therefore uniquely identify multiple adapters on individual PCI cards.
- For pluggable ISA adapters, CD is equal to the order of the ISA cards defined/configured either by SMIT or the ISA Adapter Configuration Service Aid.
- For integrated ISA adapters, CD is equal to a unique code identifying the ISA adapter. In most cases, this code is equal to the adapter's physical location code. In cases where a physical location code is not available, CD will be FF.

EF is the connector ID, used to identify the adapter's connector to which a resource is attached.

GH is used to identify a port, device, or FRU. For example:

- For async devices, GH defines the port on the fanout box. The values are 00 to 15.
- For a diskette drive, H identifies either diskette drive 1 or 2. G is always 0.
- For all other devices, GH is equal to 00.

For integrated adapters, EF-GH is the same as the definition for a pluggable adapter. For example, the location code for a diskette drive is 01-D1-00-00. A second diskette drive is 01-D1-00-01.

For SCSI devices, the location code is defined as follows:

```
AB-CD-EF-G,H
 |  |  | | |
 |  |  | | Logical Unit address of the SCSI Device
 |  |  | Control Unit Address of the SCSI Device
 |  |  Connector ID
 |  devfunc Number, Adapter Number or Physical Location
 Bus Type or PCI Parent Bus
```

Where

AB-CD-EF are the same as non-SCSI devices.

G defines the control unit address of the device. Values of 0 to 15 are valid.

H defines the logical unit address of the device. Values of 0 to 255 are valid.

A bus location code that is also generated as '00-XXXXXXXX' where XXXXXXXX is equivalent to the node's unit address.

Examples of physical location codes displayed by AIX are as follows:

- First processor card plugged into planar 1:

  ```
  P1-C1
  ```

- Second memory card in planar P1:

  ```
  P1-M2
  ```

- Memory DIMM 12 on second memory card plugged into planar P1:

  ```
  P1-M2.12
  ```

Examples of AIX location codes displayed are as follows:

- Integrated PCI adapter as follows:

  ```
  10-80      Ethernet
  10-60      Integrated SCSI Port 1 (internal)
  10-88      Integrated SCSI Port 2 (external)
  ```

- Pluggable PCI adapters as follows:

  ```
  20-58 to 20-5F    Any PCI card in slot 1
  20-60 to 20-67    Any PCI card in slot 2
  10-68 to 10-6F    Any PCI card in slot 3
  10-70 to 10-77    Any PCI card in slot 4
  10-78 to 10-7F    Any PCI card in slot 5
  ```

- Integrated ISA adapters as follows:

```
01-D1     Diskette adapter
01-R1     Parallel port adapter
01-S1     Serial port 1 adapter
01-S2     Serial port 2 adapter
01-S3     Serial port 3 adapter
01-K1     Keyboard adapter
```

- Device attached to SCSI controller

```
10-60-00-4,0     Device attached to integrated SCSI controller 1:
```

AIX and Physical Location Code Reference Table

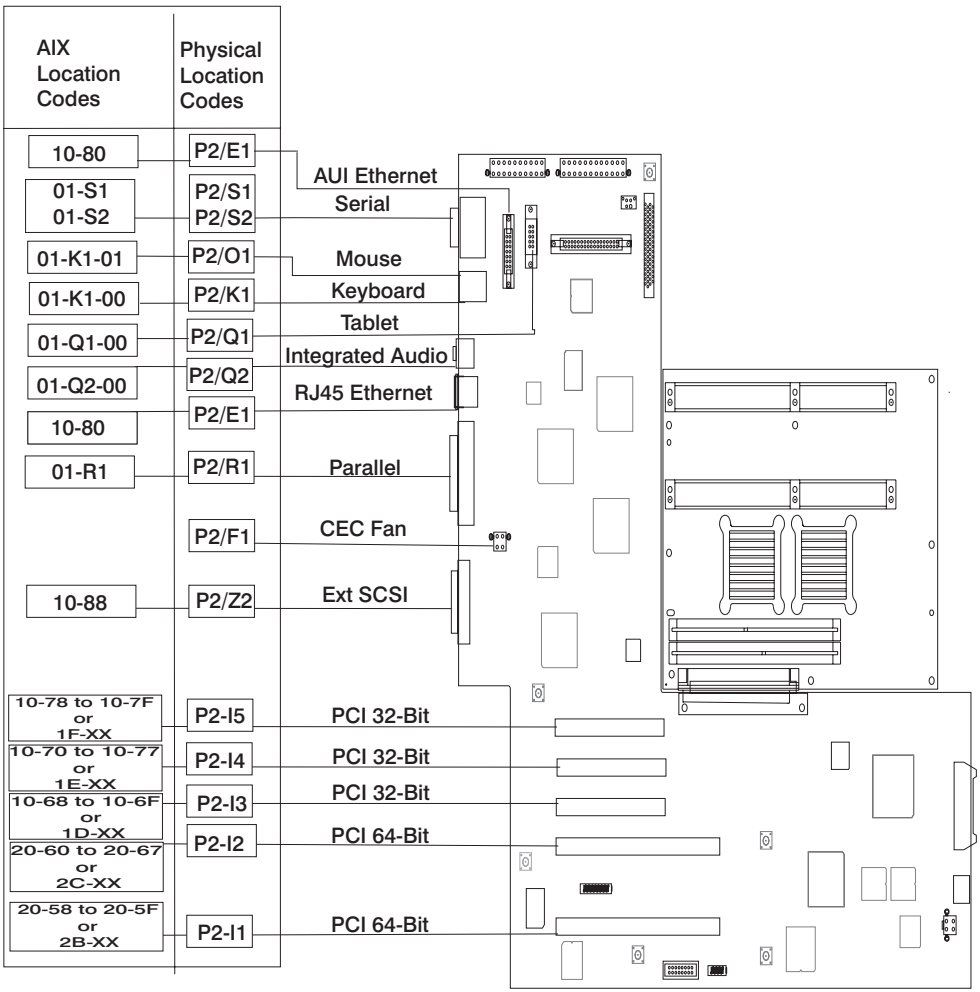

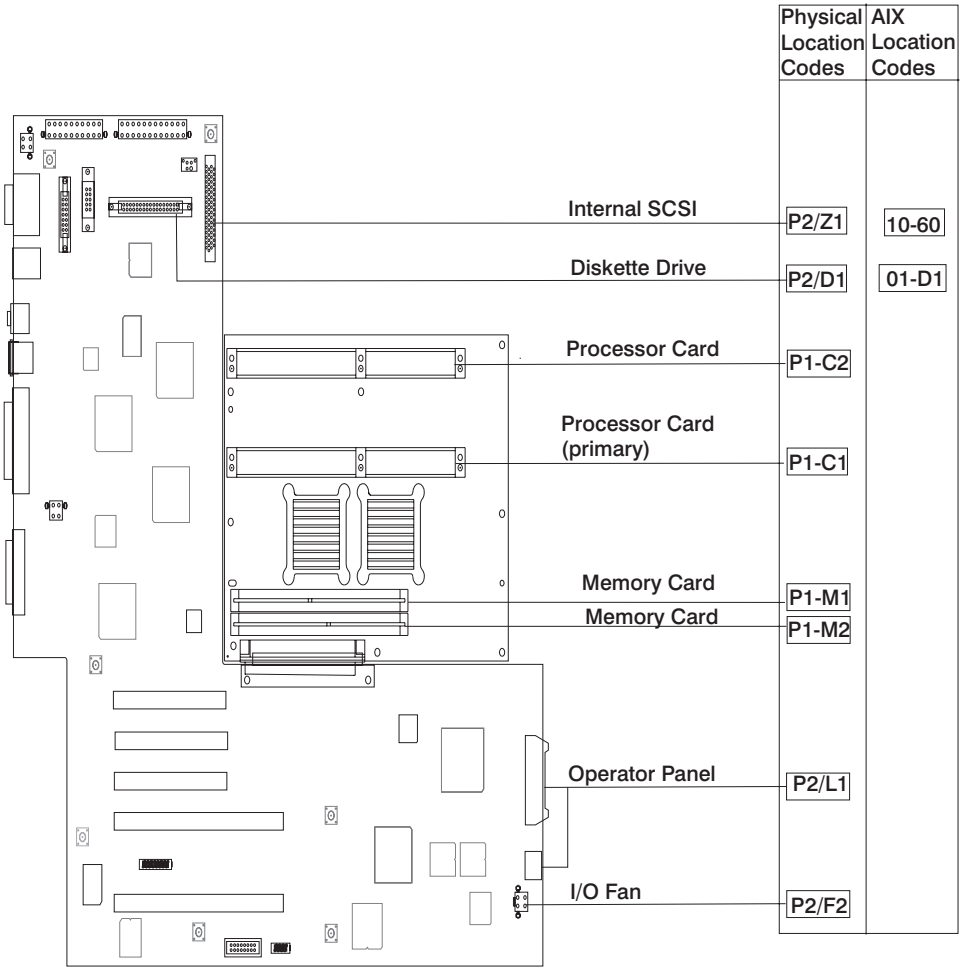
Physical Location Codes
AIX Location Codes
Internal SCSI
P2/Z1
10-60
Diskette Drive
P2/D1
01-D1
Processor Card
P1-C2
Processor Card (primary)
P1-C1
Memory Card
P1-M1
Memory Card
P1-M2
Operator Panel
P2/L1
I/O Fan
P2/F2

FRU Name	AIX Location Code	Physical Location Code	Physical Connection	Logical Identification
Central Electronics Complex (CEC)				
System board	00-00	P1		
Processor card 1	00-00 and 00–01 (2–way card)	P1-C1	Processor connector J6	CPU ID proc0 and proc1 (2-way card)
Processor card 2	00-02 and 00–03 (2–way card)	P1-C2	Processor connector J8	CPU ID proc2 and proc3 (2-way card)
Memory card 1	00-00	P1-M1	Memory card connector J3	
Memory card 1 modules 1 thru 16	00-00	P1-M1.1 through P1-M1.16	Memory card sockets J1, J2, J3, J4, J5, J6, J7, J8 J9, J10, J11, J12, J13, J14, J15, J16	Extents: 8L, 8H, 10L, 10H, 12L, 12H, 14L, 14H, 9L, 9H, 11L, 11H, 13L, 13H, 15L, 15H
Memory card 2	00-00	P1-M2	Memory card connector J2	
Memory card 2 modules 1 thru 16	00-00	P1-M2.1 through P1-M2.16	Memory card sockets J1, J2, J3, J4, J5, J6, J7, J8 J9, J10, J11, J12, J13, J14, J15, J16	Extents: 8L, 8H, 10L, 10H, 12L, 12H, 14L, 14H, 9L, 9H, 11L, 11H, 13L, 13H, 15L, 5H
I/O board	00-00	P2		
Integrated Devices				
Diskette Drive	01-D1-00-00	P2-D1	I/O board Connector J13	Base Address 0x0310
Keyboard	01-K1-00-00	P2-K1	I/O board connector J24	Base Address 0x0060
Mouse	01-K1-01-00	P2-O1	I/O board connector J24	0x0060
Diskette Port	01-D1	P2/D1	I/O board connector J17	0x03f0
Keyboard Port	01-K1-00	P2/K1	I/O board connector J24	0x0060
Mouse Port	01-K1-01	P2/O1	I/O board connector J24	0x0060
Tablet Port	01-Q1-01-00	P2/Q1	I/O board connector J18	0x0060
Audio	01-Q2-00	P2/Q2	I/O board connector J26	0x0060
Serial Port 1	01-S1	P2/S1	I/O board connector J23	0x0318

FRU Name	AIX Location Code	Physical Location Code	Physical Connection	Logical Identification
Serial Port 2	01-S2	P2/S2	I/O board connector J23	0x0218
Parallel Port	01-R1	P2/R1	I/O board connector J27	0x0378
AUI Ethernet Port	10-80	P2/E1	I/O board connector J20	Host Bridge ID00, Device 06
RJ45 Ethernet Port	10-80	P2/E1	I/O board connector J25	Host Bridge ID00, Device 06
Internal SCSI Port	10-60	P2/Z1	I/O board connector J7	Host Bridge ID00, Device 02
External SCSI Port	10-88	P2/Z2	I/O board connector J28	Host Bridge ID00, Device 07
Pluggable Adapters				
Card in PCI Slot 1P	20-58 to 20-5F or 2B-xx	P2-I1	I/O board connector J9	Host Bridge ID01, Device 01
Card in PCI Slot 2P	20-60 to 20-67 or 2C-xx	P2-I2	I/O board connector J8	Host Bridge ID01, Device 02
Card in PCI Slot 3P	10-68 to 10-6F or 1D-xx	P2-I3	I/O board connector J14	Host Bridge ID00, Device 03
Card in PCI Slot 4P	10-70 to 10-77 or 1E-xx	P2-I4	I/O board connector J13	Host Bridge ID00, Device 04
Card in PCI Slot 5P	10-78 to 10-7F or 1F-xx	P2-I5	I/O board connector J12	Host Bridge ID00, Device 05
SCSI Devices				
Base CD-ROM (Bay D1)	10-60-00-1, 0	P2-Z1-A1		Primary SCSI bus ID 1 (refer to the note at the end of this table)
Media Device in Bay D2	10-60-00-0,0	P2-Z1-A0		Primary SCSI bus ID 0 (refer to the note at the end of this table)
DASD in Bay D4	10-60-00-9,0	P2-Z1-A9		Primary SCSI bus ID 9
DASD in Bay D5	10-60-00-8,0	P2-Z1-A8		Secondary SCSI bus ID 8
Fans				
I/O fan		F2	Fan connector J3 at system board	
CEC fan		F1	Fan connector J21 at system board	

FRU Name	AIX Location Code	Physical Location Code	Physical Connection	Logical Identification
I/O fan connector		P2/F2	Fan connector J3 at system board	
CEC fan connector		P2/F1	Fan connector J21 at system board	
Operator Panel				
Operator panel		L1	I/O board connector J1	
Operator panel Connector		P2/L1	I/O board connector J1	
Power Supply				
Power supply		V1		
Battery				
Battery		V2	I/O board connector J11	

Notes:

1. The physical location code for the PCI slots, when empty, uses the P1/Ix notation, where the '/' identifies an integrated device (in this case the empty slot). A PCI device plugged into the slot uses the P1-Ix notation, where the '-' identifies a plugged device.
2. The SCSI bus IDs are the recommended values. The SCSI IDs shown for media devices indicate how the devices are set when they are shipped from the factory. Field installations may not comply with these recommendations.

Specifications

The mechanical packaging, cooling, power supply, and environmental requirements for the server are as follows:

Dimensions

- With pedestal:
  - Height - 615 mm (24.2 inches)
  - Depth - 681 mm (26.8 inches)
  - Width - 340 mm (13.4 inches)
- Without pedestal:
  - Height - 610 mm (24.0 inches)
  - Depth - 681 mm (26.8 inches)
  - Width - 221 mm (8.7 inches)

Weight

Configuration-dependent

Operating Environment - Class B

- Temperature - 16° to 32°C (60° to 90°F)
- Humidity - 8% to 80% noncondensing
- Maximum Altitude - 2135 m (7000 feet)

Power Source Loading

- Typical EMC Configuration - 0.3 kVA
- Maximum - 0.5 kVA

Power Requirements

- Typical - 275 watts
- Maximum - 640 watts

Power Factor

0.89 - 0.98

Operating Voltage

- 100 to 127V ac; 50 to 60 Hz
- 200 to 240V ac; 50 to 60 Hz

Heat Output (Maximum)

- Typical - 400 Btu/hr
- Maximum - 794 Btu/hr

Acoustics

- 6.0 Bels operating
- 5.5 Bels idle

Power Cables

To avoid electrical shock, a power cable with a grounded attachment plug is provided. Use only properly grounded outlets.

Power cables used in the United States and Canada are listed by Underwriter's Laboratories (UL) and certified by the Canadian Standards Association (CSA). These power cords consist of the following:

- Electrical cables, Type SVT or SJT.
- Attachment plugs complying with National Electrical Manufacturers Association (NEMA) 5-15P, that is:

  ″For 115 V operation, use a UL listed cable set consisting of a minimum 18 AWG, Type SVT or SJT three-conductor cord a maximum of 15 feet in length and a parallel blade, grounding type attachment plug rated at 15 A, 125 V.″

  ″For 230 V operation in the United States use a UL listed cable set consisting of a minimum 18 AWG, Type SVT or SJT three-conductor cable a maximum of 15 feet in length, and a tandem blade, grounding type attachment plug rated at 15 A, 250 V.″
- Appliance couplers complying with International Electrotechnical Commission (IEC) Standard 320, Sheet C13.

Power cables used in other countries consist of the following:

- Electrical cables, Type HD21.
- Attachment plugs approved by the appropriate testing organization for the specific countries where they are used.

  ″For units set at 230 V (outside of U.S.): use a cable set consisting of a minimum 18 AWG cable and grounding type attachment plug rated 15 A, 250 V. The cable set should have the appropriate safety approvals for the country in which the equipment will be installed and should be marked `HAR'.″

Refer to Chapter 10, "Parts Information," on page 271 to find the power cables that are available.

Service Inspection Guide

Perform a service inspection on the system when:

- The system is inspected for a maintenance agreement.
- Service is requested and service has not recently been performed.
- An alterations and attachments review is performed.
- Changes have been made to the equipment that may affect the safe operation of the equipment.
- External devices with their own power cables have those cables attached.

If the inspection indicates an unacceptable safety condition, the condition must be corrected before anyone can service the machine.

Note: The correction of any unsafe condition is the responsibility of the owner of the system.

Perform the following checks:

1. Check the covers for sharp edges and for damage or alterations that expose the internal parts of the system unit.
2. Check the covers for proper fit to the system unit. They should be in place and secure.
3. Gently rock the system unit from side to side to determine if it is steady.
4. Set the power switch of the system unit to Off.
5. Remove the covers.
6. Check for alterations or attachments. If there are any, check for obvious safety hazards such as broken wires, sharp edges, or broken insulation.
7. Check the internal cables for damage.
8. Check for dirt, water, and any other contamination within the system unit.
9. Check the voltage label on the back of the system unit to ensure that it matches the voltage at the outlet.
10. Check the external power cable for damage.
11. With the external power cable connected to the system unit, check for 0.1 ohm or less resistance between the ground lug on the external power cable plug and the metal frame.
12. Perform the following checks on each device that has its own power cables:
    a. Check for damage to the power cord.
    b. Check for the correct grounded power cable.
    c. With the external power cable connected to the device, check for 0.1 ohm or less resistance between the ground lug on the external power cable the metal frame of the device.
13. Install the covers.

Chapter 2. Diagnostics Overview

Model 270 systems use an integrated set of software diagnostic procedures to facilitate isolation of failing components and system maintenance. This book, along with the *RS/6000 and @server pSeries Diagnostics Information for Multiple Bus Systems*, are the basis of the diagnostic procedures for the system. In particular, the following sections in this book are important for the trained service representative to understand and use when isolating a failure on the system:

- Chapter 4, “Checkpoints,” on page 71
- Chapter 5, “Error Code to FRU Index,” on page 93
- Chapter 6, “Loading the System Diagnostics,” on page 147
- Chapter 10, “Parts Information,” on page 271

The manufacturer recommends that systems configured with 4 GB of memory or greater have access to a 4 mm or 8 mm tape drive for submission of system dump information if required. This function can be accomplished through locally-attached or network-attached devices, as appropriate.

Maintenance Analysis Procedures (MAPs)

Maintenance analysis procedures (MAPs) guide the trained service person through the system. These MAPs are the entry point for all isolation and error-recovery procedures. The MAPs are consistent with existing procedures and methods. The system uses a set of integrated procedures, mentioned earlier, to which the MAPS are the primary entry point.

The MAPS are as follows:

- Entry MAP
- Quick Entry MAP
- Problem Determination MAP
- Power MAP
- Minimum Configuration MAP

The Entry Map is the starting point for problem determination. The purpose of this MAP is to quickly point to the appropriate MAP or service reference information either in this book, or in the common book set, which includes the *RS/6000 and @server pSeries Diagnostics Information for Multiple Bus Systems* and the*PCI Adapter Placement Reference*.

The Quick Entry MAP is a subset of the Entry MAP and helps to save time for some types of problems.

The Problem Determination MAP provides a structured analysis method to get an error code if one is not provided by the customer, or if diagnostics cannot be loaded.

The Power MAP deals with isolation of components to diagnose a power problem. The nature of power problems can be related to powering up and down the system, or power failures that occur after power is turned on.

The Minimum Configuration MAP is used to locate defective components not found by normal diagnostics or error-isolation methods. This MAP provides a systematic method of isolation to the failing item or items.

Checkpoints

Model 270 servers use various types of checkpoints, error codes, and SRNs, which are referred to throughout this book (primarily in Chapter 4, “Checkpoints,” on page 71, Chapter 5, “Error Code to FRU Index,” on page 93, Chapter 6, “Loading the System Diagnostics,” on page 147, and Chapter 10, “Parts Information,” on page 271). These codes may appear in the service processor boot progress log, the AIX error log, and the operator panel display. Understanding the definition and relationships of these codes is important to the service personnel who are installing or maintaining Model 270 servers.

Codes that can appear on the operator panel or in error logs are as follows:

Checkpoints

Checkpoints display in the operator panel from the time ac power is connected to the system until the AIX login prompt is displayed after a successful operating system boot. These checkpoints have the following forms:

E000 - E075

These checkpoints display from the time ac power is connected to the system until the `0K` prompt displays on the operator panel display. During this time, the service processor performs self-test and NVRAM initialization.

E0A0 - E0E1

When power up is initiated, the service processor starts built-in self-test (BIST) on the central electronics complex (CEC). VPD data are read.

E0E2 - E2xx

This range indicates that the system processor is in control and is initializing system resources.

E3xx These codes indicate that the system processor is running memory tests.

E1xx The system firmware attempts to boot from devices in the boot list. Control is passed to AIX when E105 (normal mode boot) or E15B (service mode boot) displays on the operator panel display.

0xxx 0xxx codes are AIX checkpoints and configuration codes. Location codes may also be shown on the operator panel display during this time.

Error Codes

If a fault is detected, an 8-digit error code is displayed in the operator panel display. A location may be displayed at the same time on the second line of the display.

Checkpoints can become error codes if the system fails to advance past the point at which the code was presented.

For a list of checkpoints, see Chapter 4, "Checkpoints," on page 71. Each entry provides a description of the event and the recommended action if the system fails to advance.

SRNs Service request numbers, in the form xxx-xxx, may also be displayed on the operator panel display and be noted in the AIX error log.

SRNs are listed in the *RS/6000 and @server pSeries Diagnostics Information for Multiple Bus Systems*.

FRU Isolation

For a list of error codes and recommended actions for each code, see Chapter 5, "Error Code to FRU Index," on page 93. These actions can refer to Chapter 10, "Parts Information," on page 271, Chapter 3, "Maintenance Analysis Procedures (MAPs)," on page 27, or provide informational message and directions. If a replacement part is indicated, the part name is included. The respective AIX and physical location codes are listed for each occurrence as required. For a list of location codes, see "AIX and Physical Location Code Reference Table" on page 13.

To look up part numbers and view component diagrams, see Chapter 10, "Parts Information," on page 271. The beginning of the chapter provides a parts index with the predominant field replaceable units (FRUs) listed by name. The remainder of the chapter provides illustrations of the various assemblies and components that make up RS/6000 44P Series Model 270 systems.

Electronic Service Agent for the RS/6000

Service support for the system can be enhanced through the use of the application program, Electronic Service Agent. This application provides a number of advantages for the RS/6000 44P Series Model 270 customer, including automatic error reporting and analysis without customer intervention. The Electronic Service Agent kit is provided with the RS/6000 44P Series Model 270 server and includes the following:

- Electronic Service Agent for the RS/6000 program on CD-ROM
- The *CE Information Guide* for Electronic Service Agent

For more details on Electronic Service Agent for the RS/6000, see the *CE Information Guide*,

Using the Service Processor and Electronic Service Agent Features

The service processor and Electronic Service Agent features protect users against unnecessary system downtime by advising support personnel (both internal and external) of any unexpected changes in the system environment. In combination, the two features provide a flexible solution to automated system maintenance.

Service Processor

The service processor runs on its own power boundary and continually monitors hardware attributes, the AIX operating system, and the environmental conditions within the system. Any system failure which prevents the system from returning to an operational state (a fully functional AIX operating system) is reported by the service processor. The service processor is controlled by firmware and does not require the AIX operating system to be operational to perform its tasks. If any system failures are detected, the service processor has the ability to take predetermined corrective actions. The methods of corrective actions are as follows:

- Surveillance
- Call home
- AIX operating system monitoring

Surveillance is a function in which the service processor monitors the system through *heartbeat* communication with the system firmware. The heartbeat is a periodic signal that the firmware can monitor. During system startup, the firmware surveillance monitor is automatically enabled to check for heartbeats from the firmware. If a heartbeat is not detected within a default period, the service processor cycles the system power and attempts to restart until the system either restarts successfully, or a predetermined retry threshold is reached. In the event the service processor is unsuccessful in bringing the system online (or in the event that the user asked to be alerted to any service processor-assisted restarts), the system can call home to report the error.

The call home function can be initialized to call either a service center telephone number, a customer administration center, or a digital pager telephone number. The service processor can be configured to stop at the first successful call to any of the numbers listed, or can be configured to call every number provided. If connected to the service center, the service processor transmits the relevant system information (the system's serial number and model type) and service request number (SRN). If connected to a digital pager service, the service processor inputs a customer voice telephone number defined by the customer. An established sequence of digits or the telephone number to a phone near the failed system could be used to signal a system administrator to a potential system failure.

During normal operations, the service processor can also be configured to monitor the AIX operating system. If AIX does not respond to the service processor heartbeat, the service processor assumes the operating system is hung. The service processor can automatically initiate a restart and, if enabled, initiate the call home function to alert the appropriate people to the system hang. Enabling operating system surveillance also enables AIX detect any service processor failures and report those failures to the Electronic Service Agent application.

Unlike the Electronic Service Agent, the service processor cannot be configured in a client/server environment where one system can be used to manage all dial-out functions for a set of systems.

Prior to installing the Electronic Service Agent feature, ensure that you have the latest level of system firmware. You also need a properly configured modem. For more information on configuring a modem, see Appendix E, “Modem Configurations,” on page 293.

Electronic Service Agent

The Electronic Service Agent is a software extension to the AIX operating system that monitors the system while the AIX operating system is running. The Electronic Service Agent monitors and analyzes all recoverable system failures, and, if needed, can automatically place a service call to a service center (without user intervention).

The service center receives the machine type/serial number, host name, SRN, and a problem description. The service center analyzes the problem report and, if warranted, dispatches a service person to the customer site. The service center also determines if any hardware components need to be ordered prior to the service person’s arrival.

The Electronic Service Agent code also gives the user the option to establish a single system as the problem reporting server. A single system, accessible over the user network, can be used as the central server for all the other systems on the local area network (LAN) that are running the Electronic Service Agent application. If the Electronic Service Agent application on a remote client decides a service request needs to be placed, the client forwards the information to the Electronic Service Agent server that dials the service center telephone number from its locally attached modem. In this scenario, the user only needs to maintain a single analog line for providing call-out capabilities for a large set of servers.

When used in a scalable parallel (SP) environment, a client/server type implementation is configured. The Electronic Service Agent client code runs on each of the SP nodes. The server component runs on the control workstation. In the event of any system failures, the relevant information is transmitted to the control workstation through the integrated Ethernet. After it has been alerted to the system failure, the control workstation initiates actions to prepare and send the service request.

A modem is required for enabling automated problem reporting to the service center. Configuration files for several types of modems are included as part of the Electronic Service Agent package. Refer to Appendix E, “Modem Configurations,” on page 293 for more information on configuring your modem.

Chapter 3. Maintenance Analysis Procedures (MAPs)

This chapter contains maintenance analysis procedures (MAPs).

Notes:

1. When possible, run online diagnostics in service mode. Online diagnostics perform additional functions, compared to standalone diagnostics. This ensures that the error state of the system is captured in NVRAM (non-volatile random access memory) for your use in fixing the problem. The AIX error log and SMIT are only available when diagnostics are run from the hard drive.
2. If more than eight digits are displayed in the operator panel, use only the first eight digits to find the error in the tables. The digits that display beyond the first eight digits are location codes that can assist you in diagnosing the problem. See “Location Codes” on page 9.
3. Licensed programs frequently rely on network configuration and system information stored on the VPD (vital product data) module on the operator panel control assembly. If the MAPs indicate that the operator panel control assembly should be replaced, swap the VPD module from the old operator panel to the new one. If the existing VPD module must be replaced, call technical support for recovery instructions. If recovery is not possible, notify the system owner that new keys for licensed programs may be required.
4. If a network adapter or the I/O board is replaced, the network administrator must be notified so that the client IP addresses used by the server can be changed. In addition, the operating system configuration of the network controller might need to be changed in order to enable system startup. Also check to ensure that any client or server that addresses this system is updated.

Quick Entry MAP

Use the following table to determine your starting point.

If you replace FRUs or perform an action and the problem is still not corrected, go to “MAP 1540: Minimum Configuration” on page 50 unless otherwise indicated in the tables.

If you replace FRUs or perform an action and the problem is corrected, go to "MAP 410: Repair Checkout" in the *RS/6000 and @server pSeries Diagnostics Information for Multiple Bus Systems*.

Quick Entry MAP Table of Contents

Problem Description	Page No.
Service Actions	28
System Stops With an 8-Digit Number Displayed	28
System Stops With a 4-Digit Number Displayed	28
System Stops With a 3-Digit Number Displayed	29
System Stops or Hangs With Alternating Numbers Displayed in the Operator Display Panel.	29
Display Problem (Distortion, Blurring, Etc.)	29
Power and Cooling Problems	30
Flashing 888 in Operator Panel Display	30
Other Symptoms or Problems	30
You Cannot Find the Symptom in this Table	33

Symptom	Action
Service Actions	
You have parts to exchange or a corrective action to perform.	1. Go to Chapter 9, “Removal and Replacement Procedures,” on page 223. 2. Go to "MAP 410: Repair Checkout" in the *RS/6000 and @server pSeries Diagnostics Information for Multiple Bus Systems*.
You need to verify that a part exchange or corrective action corrected the problem.	Go to "MAP 410: Repair Checkout" in the *RS/6000 and @server pSeries Diagnostics Information for Multiple Bus Systems*.
You need to verify correct system operation.	Go to "MAP 410: Repair Checkout" in the *RS/6000 and @server pSeries Diagnostics Information for Multiple Bus Systems*.
System Stops With A 8-Digit Number Displayed	
The system stops with an 8-digit error code displayed in the operator panel display or on the console.	Record the error code. Go to Chapter 5, “Error Code to FRU Index,” on page 93.
System Stops With A 4-Digit Number Displayed	

Symptom	Action
The system stops and a 4-digit number is displayed in the operator panel display or on the console.	If the number displayed has the format ″E0xx″ then go to “Service Processor Checkpoints” on page 71. If the number displayed is in the range ″E1xx-EFFF″, make note of any location code that is displayed on the second line of the operator panel. If the location code indicates a card slot (for example P2-I3), replace the card in the indicated slot. If this does not correct the problem, then go to “Firmware Checkpoints” on page 75. For all other numbers, record SRN 101-xxx, where **xxx** is the last three digits of the four-digit number displayed in the operator panel, then go to the Fast Path MAP in the *RS/6000 and @server pSeries Diagnostics Information for Multiple Bus Systems*. **Note:** If the operator panel displays two sets of numbers, use the bottom set of numbers as the error code.
System Stops With A 3-Digit Number Displayed	
The system stops and a 3-digit number displayed in the operator panel display or on the console.	Record SRN 101-xxx, where **xxx** is three-digit number displayed in the operator panel, then go to the Fast Path MAP in the *RS/6000 and @server pSeries Diagnostics Information for Multiple Bus Systems*.
System Stops or Hangs With Alternating Numbers Displayed in the Operator Display Panel	
The operator panel display alternates between the code ″E1FD″ and another ″Exxx″ code.	Record both codes. Go to ″E1FD″ in “Firmware Checkpoints” on page 75.
The operator panel display alternates between the codes ″E1DE″ and ″E1AD″.	Record both codes. Go to ″E1DE″ in “Firmware Checkpoints” on page 75.
Display Problem (Blank, Distortion, Blurring, Etc.).	

Symptom	Action
All display problems.	• If using a graphics display: 1. Go to the *problem determination procedures* for the display. 2. If you do not find a problem, replace the display adapter. 3. If you do not find a problem, suspect the I/O board. Go to “MAP 1540: Minimum Configuration” on page 50. • Using an ASCII terminal: 1. Make sure that the ASCII terminal is connected to S1. 2. If problems persist, go to the *problem determination procedures* for the terminal. 3. If you do not find a problem, suspect the I/O board. Go to “MAP 1540: Minimum Configuration” on page 50.
Power and Cooling Problems	
The power LEDs on the operator panel and the power supply do not start flashing within 30 seconds of ac power application.	Go to “MAP 1520: Power” on page 45.
The power LEDs on the operator panel and the power supply do not come on or stay on.	Go to “MAP 1520: Power” on page 45.
The power LEDs on the operator panel and the power supply come on and stay on but the system does not power on.	Go to “MAP 1520: Power” on page 45.
The cooling fan(s) do not come on or come on but do not stay on.	Go to “MAP 1520: Power” on page 45.
Flashing 888 in Operator Panel Display	
888 is displayed in the operator panel.	Go to the Fast Path MAP in the *RS/6000 and @server pSeries Diagnostics Information for Multiple Bus Systems*.
Other Symptoms or Problems	
You have OK displayed.	The service processor is ready. Go to ″MAP 0020: Problem Determination Procedure″ in the *RS/6000 and @server pSeries Diagnostics Information for Multiple Bus Systems*.
You have STBY displayed.	The service processor is ready. The system was shut down by the operating system and is still powered on. This condition can be requested by a privileged system user with no faults. See service processor error log for possible operating system fault indications.

Symptom	Action
The system POST indicators are displayed on the system console; the system pauses and then restarts. The term ″POST indicators″ refers to the icons (graphic display) or device mnemonics (ASCII terminal) that appear during the power-on self-test (POST).	Go to “Boot Problems/Concerns” on page 89.
The system stops and POST indicators are displayed on the system console. The term ″POST indicators″ refers to the icons (graphic display) or device mnemonics (ASCII terminal) that appear during the power-on self-test (POST).	Go to “MAP 1540: Minimum Configuration” on page 50 to isolate the problem.
The system stops and the message ″STARTING SOFTWARE PLEASE WAIT...″ is displayed on the ASCII terminal, or the boot indicator is displayed on a graphics terminal.	Go to Chapter 4, “Checkpoints,” on page 71.
The system does not respond to the password being entered, or the system login prompt is displayed when booting in service mode.	Verify that the password is being entered from the ASCII terminal or keyboard defined as the system console. If so, then the keyboard or its controller may be faulty. • If entering the password from the keyboard which is attached to the system, replace the keyboard. If replacing the keyboard does not fix the problem, replace the I/O board. (See note 4 on page 27.) • If entering the password from a keyboard which is attached to an ASCII terminal, use the problem determination procedures for the ASCII terminal. Make sure the ASCII terminal is connected to S1. Replace the I/O board if these procedures do not reveal a problem. • If the problem is fixed, go to "MAP 410: Repair Checkout" in the *RS/6000 and @server pSeries Diagnostics Information for Multiple Bus Systems*. If the problem persists, go to “MAP 1540: Minimum Configuration” on page 50 to isolate the problem.

Symptom	Action
No codes are displayed on the operator panel within a few seconds of turning on the system. The operator panel is blank before the system is powered on.	Reseat the operator panel cable. If the problem is not resolved, replace these parts in the following order: 1. Operator panel assembly. Update the VPD information in the new operator panel. 2. I/O board (See notes 4 on page 27.) If the problem is fixed, go to "MAP 410: Repair Checkout" in the *RS/6000 and @server pSeries Diagnostics Information for Multiple Bus Systems*. If the problem persists, go to “MAP 1540: Minimum Configuration” on page 50 to isolate the problem.
The SMS configuration list or boot sequence selection menu shows more SCSI devices attached to a controller/adapter than are actually attached.	A device may be set to use the same SCSI bus ID as the control adapter. Note the ID being used by the controller/adapter (this can be checked and/or changed via an SMS utility), and verify that no device attached to the controller is set to use that ID. If settings do not appear to be in conflict: 1. Replace the SCSI cable. 2. Replace the device. 3. Replace the SCSI adapter (or I/O board if connected to one of the two integrated SCSI controllers on the I/O board). (See note 4 on page 27. **Note:** In a ″twin-tailed″ configuration where there is more than one initiator device (normally another system) attached to the SCSI bus, it may be necessary to change the ID of the SCSI controller or adapter with the System Management Services.

Symptom	Action
The System Management Services menu is displayed.	The device or media you are attempting to boot from may be faulty. 1. Check the SMS error log for any errors. To check the error log: a. Choose error log from the utilities menu. b. If an error is logged, check the time stamp. c. If the error was logged during the current boot attempt, record it. d. Look up the error in Chapter 4, "Checkpoints," on page 71 and perform the listed action. e. If no recent error is logged in the error log, continue to the next step below. 2. Try to boot from an alternate boot device connected to the same controller as the original boot device. If the boot succeeds, replace the original boot device. (For removable media devices try the media first.) 3. Go to "MAP 1540: Minimum Configuration" on page 50.
You have a problem that does not prevent the system from booting.	Go to the Fast Path MAP in the *RS/6000 and @server pSeries Diagnostics Information for Multiple Bus Systems*.
You have an SRN.	Go to the Fast Path MAP in the *RS/6000 and @server pSeries Diagnostics Information for Multiple Bus Systems*.
You suspect a cable problem.	See the *RS/6000 and @server pSeries Adapters, Devices, and Cable Information for Multiple Bus Systems*.
You do not have a symptom.	Go to MAP 0020 in the *RS/6000 and @server pSeries Diagnostics Information for Multiple Bus Systems*.
You have not determined a symptom.	Go to "MAP 1020: Problem Determination" on page 34.
You Cannot Find the Symptom in this Table	
All other problems.	Go to "MAP 1020: Problem Determination" on page 34.

MAP 1020: Problem Determination

Purpose of This MAP

Use this MAP to get an error code if you were not provided one by the customer or you are unable to load diagnostics. If you are able to load the diagnostics, go to MAP 0020 in the *RS/6000 and @server pSeries Diagnostics Information for Multiple Bus Systems*.

The service processor may have recorded one or more symptoms in its error log. It is a good idea to examine that error log before proceeding (see Service Processor System Information Menu).

Be prepared to record code numbers and use those numbers in the course of analyzing a problem. Go to “Step 1020-1” on page 35.

The service processor may have been set by the user to monitor server operations and to attempt recoveries. You can disable these actions while you diagnose and service the system. You can use that same service aid to restore the settings at the end of your service action.

In case the service processor settings were not saved by the user, if you disable them, make notes of their current settings so that you can restore them before you leave.

In addition to the parameters in the table below, you might want to disconnect the modem to prevent incoming signals that could cause the system to power on.

Following are the service processor settings. The service processor menus are described in “Service Processor Menus” on page 151.

Surveillance	From the Service Processor Setup Menu, go to the Surveillance Setup Menu and disable surveillance.
Unattended Start Mode	From the Service Processor System Power Control Menu, disable unattended start mode.
Reboot Policy	From the System Power Control Menu, go to the Reboot/Restart Policy Setup Menu and set: 1. Number of reboot attempts to **0** (zero) 2. Use OS-Defined restart policy to **No** 3. Enable supplemental restart policy to **No**.
Call Out	From the Call-In/Call-Out Setup Menu, go to the Serial Port Selection Menu and disable call-out on both serial ports.

Step 1020-1

The following steps analyze a failure to load the diagnostic programs.

Note: You are asked questions regarding the operator panel display. You are also asked to perform certain actions based on displayed POST indicators.

1. Insert the diagnostic CD-ROM into the CD-ROM drive.
2. Turn off the power.
3. Turn on the power.
4. When the keyboard indicator is displayed (the word **keyboard** on an ASCII terminal or the keyboard icon on a graphical display), press the F5 key on the directly attached keyboard or the number 5 key on an ASCII terminal.
5. Enter a password, if you are requested.
6. Wait until the diagnostics are loaded or the system appears to stop.
7. Find your symptom in the following table. Then follow the instructions given in the Action column.

Symptom	Action
The diskette LED is blinking rapidly, or EIEA or EIEB is displayed on the operator panel.	The flash EPROM data is corrupted. Run the recovery procedure for the flash EPROM. See “Firmware Recovery” on page 207.
The system stops with a prompt to enter a password.	Enter the password. You are not allowed to continue until a valid password has been entered. When you have entered a valid password, go to the beginning of this table and wait for one of the other conditions to occur.
The diagnostic operating instructions are displayed.	Go to MAP 0020 in the *RS/6000 and @server pSeries Diagnostics Information for Multiple Bus Systems*.
The system login prompt is displayed.	You may not have pressed the correct key or you may not have pressed the key soon enough when you were to indicate a service mode IPL of the diagnostic programs. If this was the case, start over at the beginning of this step. **Note:** Perform the system shutdown procedure before turning off the system. If you are sure you pressed the correct key in a timely manner, go to “Step 1020-2” on page 37.
The system does not respond when the password is entered.	Go to “Step 1020-2” on page 37.

Symptom	Action
The system stopped and a POST indicator is displayed on the system console and an 8-digit error code is not displayed.	If the POST indicator represents: • Memory, record error code M0MEM002. • Keyboard, record error code M0KBD000. • SCSI, record error code M0CON000. • Network, record error code M0NET000. • Speaker (audio), record error code M0BT0000. Go to “Step 1020-3” on page 38.
The system stops and a 4-digit number is displayed in the operator panel display.	If the number displayed has the format ″E0xx″ then go to “Service Processor Checkpoints” on page 71. If it is in the range ″E1xx-EFFF″ then go to “Firmware Checkpoints” on page 75. For all other numbers record SRN 101-xxx, where **xxx** is the last three digits of the four-digit number displayed in the operator panel, then go to the Fast Path MAP in the *RS/6000 and @server pSeries Diagnostics Information for Multiple Bus Systems*. **Note:** If the operator panel displays two sets of numbers, use the bottom set of numbers as the error code.
The System Management Services is displayed.	Go to “Step 1020-4” on page 38.
All other symptoms.	If you were directed here from the Entry MAP, go to “MAP 1540: Minimum Configuration” on page 50. Otherwise, find the symptom in the “Quick Entry MAP” on page 27.

Step 1020-2

There is a problem with the keyboard.

Find the type of keyboard you are using in the following table. Then follow the instructions given in the Action column.

Keyboard Type	Action
Type 101 keyboard (U.S.). Identify by the size of the Enter key. The Enter key is in only one horizontal row of keys.	Record error code M0KBD001; then go to “Step 1020-3” on page 38.
Type 102 keyboard World Trade (W.T.). Identify by the size of the Enter key. The Enter key extends into two horizontal rows.	Record error code M0KBD002; then go to “Step 1020-3” on page 38.
Type 106 keyboard. (Identify by the Japanese characters.)	Record error code M0KBD003; then go to “Step 1020-3” on page 38.
ASCII terminal keyboard	Go to the documentation for this type of ASCII terminal and continue problem determination.

Step 1020-3

Take the following actions:

1. Find the 8-digit error code in Chapter 5, “Error Code to FRU Index,” on page 93.

   Note: If the 8-digit error code is not listed in Chapter 5, “Error Code to FRU Index,” on page 93, look for it in the following:

   - Any supplemental service manual for the device
   - The diagnostic problem report screen
   - The Service Hints service aid
   - The CEREADME file (by using the Service Hints service aid).

   Note: Service aids can be found in *RS/6000 and @server pSeries Diagnostics Information for Multiple Bus Systems*.

2. Perform the action listed.

Step 1020-4

1. Turn off, then turn on the system unit.
2. When the keyboard indicator appears, press the F1 key on a directly attached keyboard or the 1 key on an ASCII terminal.
3. When the System Management Services appear, check the error log for any errors.
   - Display error log under utilities.
   - If an error is logged, check the time stamp.
   - If the error was logged during the current boot attempt, record it.
   - Look up the error in the Chapter 5, “Error Code to FRU Index,” on page 93 and perform the listed action.
   - If no recent error is logged in the error log, go to “MAP 1540: Minimum Configuration” on page 50.

MAP 1240: Memory Problem Resolution

Note: The firmware checkpoint that sent you here could be one of the following: E122, E213, E214, E218, E220 or E3xx. These checkpoints are referred to as ″a memory checkpoint″ in this MAP.

Purpose of This MAP

This MAP is used to troubleshoot a problem during the memory test when the system stops at a memory checkpoint and no error code is displayed on the operator panel.

Notes:

1. If the symptom changes while you are using this MAP, check for loose cards, cables, and obvious problems. If you do not find a problem, go to “MAP 1540: Minimum Configuration” on page 50.
2. The service processor may have recorded one or more symptoms in its error log. It is a good idea to examine that error log before proceeding (see Service Processor System Information Menu).
3. The service processor may have been set by the user to monitor service operations and to attempt recoveries. You might want to disable these actions while you diagnose and service the system. If you disable them, make notes of their current settings so that you can restore them before you leave. Following are the settings:

Surveillance	From the Service Processor Setup Menu, go to the OS Surveillance Setup Menu and disable surveillance.
Unattended Start Mode	From the Service Processor System Power Control Menu, disable unattended start mode.
Reboot Policy	From the System Power Control Menu, go to the Reboot/Restart Policy Setup Menu and set: 1. Number of reboot attempts to **0** (zero) 2. Use OS-Defined restart policy to **No** 3. Enable supplemental restart policy to **No**.
Call Out	From the Call-In/Call-Out Setup Menu, go to the Serial Port Selection Menu and disable call-out on both serial ports.

General Memory Information

Be sure to unplug the power cable before removing or installing the memory card or memory modules to avoid damage to them.

Memory cards can be installed in either slot (or both) on the system board. They can be installed in any sequence.

It is acceptable to have two partially populated memory cards in the system. The first memory card does not have to be fully populated before memory on the second memory card can be installed and used.

Memory modules, on the other hand, must be installed in matched (size and speed) pairs. Refer to “Memory Modules” on page 236 for labeling of the memory card and instructions on removing and installing modules. A single memory module pair can be installed in module slots J1 and J2 (not slots J1 and J3). A second memory module pair could be installed in module slots J5 and J6 (slots J3 and J4 do not have to be populated first). In addition, memory module slots J1 and J2 need not be populated before another slot pair.

Step 1240-1

1. Ensure that the diagnostics and the operating system are shut down.
2. Turn off the power.
3. Remove and reinstall any installed memory card(s).
4. Turn on the power.

Does the system stop with a memory checkpoint displayed on the operator panel?

NO Reseating the memory card has corrected the problem.

Go to ″Map 0410: Repair Checkout″ in the *RS/6000 and @server pSeries Diagnostics Information for Multiple Bus Systems*.

YES If there is only one memory card installed, tag it as ″suspect bad″ and go to “Step 1240-7” on page 42.

If there are two memory card installed, go to “Step 1240-2.”

Step 1240-2

1. Turn off the power.
2. Remove the memory card from slot J3.
3. Turn on the power.

Does the system stop with a memory checkpoint displayed on the operator panel?

NO Go to “Step 1240-4” on page 41.

YES Go to “Step 1240-3” on page 41.

Step 1240-3

1. Turn off the power.
2. Remove the memory card from slot J2.
3. Install the memory card that was removed from slot J3 in its original location.
4. Turn on the power.

Does the system stop with a memory checkpoint displayed on the operator panel?

NO Tag the memory card you removed from slot J2 as ″suspect bad″ and go to “Step 1240-7” on page 42.

YES Go to “Step 1240-6” on page 42.

Step 1240-4

1. Turn off the power.
2. Remove the memory card from slot J2.
3. Install the memory module that was removed from slot J3 in its original location.
4. Turn on the power.

Does the system stop with a memory checkpoint displayed on the operator panel?

NO Go to “Step 1240-5.”

YES Tag the memory module in slot J3 ″suspect bad″ and go to “Step 1240-7” on page 42.

Step 1240-5

1. Turn off the power.
2. Install the memory card that was removed from slot J2 in its original location.
3. Turn on the power.

Does the system stop with a memory checkpoint displayed on the operator panel?

NO Reseating the memory card has corrected the problem.

Go to ″Map 0410: Repair Checkout″ in the *RS/6000 and @server pSeries Diagnostics Information for Multiple Bus Systems*.

YES Go to “Step 1240-6” on page 42.

Step 1240-6

One of the FRUs remaining in the system unit is defective.

1. Turn off the power.
2. Exchange the following FRUs in the order listed.
   a. System board
   b. Processor card(s)
3. Turn on the power.

Does the system stop with a memory checkpoint displayed on the operator panel?

NO Go to ″Map 0410: Repair Checkout″ in the *RS/6000 and @server pSeries Diagnostics Information for Multiple Bus Systems*.

YES Reinstall the original FRU.

Repeat this step until the defective FRU is identified or all the FRUs have been exchanged.

If the symptom did not change and all the FRUs have been exchanged, go to “MAP 1540: Minimum Configuration” on page 50.

Step 1240-7

1. Turn off the power.
2. Remove all installed memory modules from the memory card that you tagged as ″suspect bad.″ Record the positions of the memory modules as they are removed so that when you are instructed to reinstall them, they can be installed in their original positions.
3. Install one pair of memory modules.
4. Turn on the power.

Does the system stop with a memory checkpoint displayed on the operator panel?

NO If there are no more memory modules to be installed, reseating the memory modules on the memory card has corrected the problem.

If there was more than one pair of memory modules on the memory card, go to “Step 1240-8” on page 43.

YES Go to “Step 1240-9” on page 43.

Step 1240-8

1. Turn off the power.
2. Install one pair of memory modules.
3. Turn on the power.

Does the system stop with a memory checkpoint displayed on the operator panel?

NO Repeat this step until all the memory modules are installed and tested.

If all the memory modules have been installed, reseating the memory modules on the memory card has corrected the problem.

Go to ″Map 0410: Repair Checkout″ in the *RS/6000 and @server pSeries Diagnostics Information for Multiple Bus Systems*.

YES Go to “Step 1240-9.”

Step 1240-9

The failure may be caused by the last pair of memory modules installed or the memory card. To isolate the failing FRU, do the following:

1. Turn off the power.
2. Exchange the last memory module pair installed.
3. Turn on the power.

Does the system stop with a memory checkpoint displayed on the operator panel?

NO Go to “Step 1240-11” on page 44.

YES Go to “Step 1240-10” on page 44.

Step 1240-10

One of the FRUs remaining in the system unit is defective.

1. Turn off the power.
2. Exchange the following FRUs in the order listed.
   a. Memory card
   b. System board
   c. Processor card(s)
3. Turn on the power.

Does the system stop with a memory checkpoint displayed on the operator panel?

NO Go to ″Map 0410: Repair Checkout″ in the *RS/6000 and @server pSeries Diagnostics Information for Multiple Bus Systems*.

YES Reinstall the original FRU.

Repeat this step until the defective FRU is identified or all the FRUs have been exchanged.

If the symptom did not change and all the FRUs have been exchanged, go to “MAP 1540: Minimum Configuration” on page 50.

Step 1240-11

One or both of the memory modules that you exchanged in the previous step may be defective. To isolate the failing memory module, do the following:

1. Turn off the power.
2. Reinstall one of the memory modules you exchanged in the previous step.
3. Turn on the power.

Does the system stop with a memory checkpoint displayed on the operator panel?

NO Repeat this step with the second memory module you exchanged in the previous step.

If both memory modules have been tested, go to ″Map 0410: Repair Checkout″ in the *RS/6000 and @server pSeries Diagnostics Information for Multiple Bus Systems*.

YES Replace the memory module.

If you have not tested both memory modules, repeat this step with the second memory module you exchanged in the previous step.

If the symptom did not change and both memory modules have been exchanged, go to “Step 1240-10.”

MAP 1520: Power

Notes:

1. This is not a start-of-call MAP. Use this Power MAP only if you have been directed here from a MAP step in the *RS/6000 and @server pSeries Diagnostics Information for Multiple Bus Systems*.
2. The system unit has power LEDs located on the operator panel and the power supply. When the system is powered off, both LEDs should be blinking. When the system is powered on, both LEDs should be on solid.

This procedure is used to locate power problems in system units. If a problem is detected, this procedure helps you isolate the problem to a failing unit.

Observe the following safety notice during service procedures.

DANGER

An electrical outlet that is not correctly wired could place hazardous voltage on metal parts of the system or the devices that attach to the system. It is the responsibility of the customer to ensure that the outlet is correctly wired and grounded to prevent an electrical shock.

Before installing or removing signal cables, ensure that the power cables for the system unit and all attached devices are unplugged.

When adding or removing any additional devices to or from the system, ensure that the power cables for those devices are unplugged before the signal cables are connected. If possible, disconnect all power cables from the existing system before you add a device.

Use one hand, when possible, to connect or disconnect signal cables to prevent a possible shock from touching two surfaces with different electrical potentials.

During an electrical storm, do not connect cables for display stations, printers, telephones, or station protectors for communication lines.

CAUTION:
This product is equipped with a three–wire power cable and plug for the user's safety. Use this power cable with a properly grounded electrical outlet to avoid electrical shock.

DANGER

To prevent electrical shock hazard, disconnect the power cable from the electrical outlet before relocating the system.

Step 1520-1

You might have been directed to this MAP for several reasons:

1. There is no indication of activity when the power-on switch on the operator panel is pressed. None of the power LEDs light and none of the fans, including the fan in the power supply, start to turn.

   Go to “Step 1520-2.”

2. When the power-on switch on the operator panel is pressed, the system begins to power on, but the operator panel power LED and/or the power supply LED does not stay on.

   Go to “Step 1520-5” on page 47.

Step 1520-2

1. Unplug the power cord from the system unit and the power outlet.
2. Check that the external power cord to the system unit has continuity.
3. Check that the power outlet has been wired correctly with the correct voltage.
4. Plug the power cord into the system unit and the power outlet.

Did you find a problem?

NO Go to “Step 1520-3.”

YES Correct the problem. Go to "MAP 410: Repair Checkout" in the *RS/6000 and @server pSeries Diagnostics Information for Multiple Bus Systems*.

Step 1520-3

1. Unplug the power cord from the system unit.
2. If you have not already done so, remove the covers as described in “Covers” on page 226.
3. Press and hold the power-on switch on the operator panel for a few seconds to discharge the power supply.
4. Unplug the power connectors (P1, P2, P3, P4, P5 and P6) from the power supply.
5. Plug the power cord into the system unit.
6. A small dark-colored switch is located on the back of the power supply, near the back of the system. It is a normally off momentary switch. Press and hold this switch for a few seconds while observing the fan in the power supply and the power LED on the power supply.

Does the fan in the power supply turn on and the power LED on the power supply change from blinking to solid while you hold the switch? (When you release the switch, the system will power down.)

NO Replace the power supply. Go to ″Map 0410: Repair Checkout″ in the *RS/6000 and @server pSeries Diagnostics Information for Multiple Bus Systems*.

YES Go to “Step 1520-4” on page 47.

Step 1520-4

The power supply is working normally.

1. Unplug the power cord from the system unit.
2. Press and hold the power-on switch on the operator panel for a few seconds to discharge the power supply.
3. Plug the power connectors (P1, P2, P3, P4, P5 and P6) into the power supply.
4. Plug the power cord into the system unit.

If a cooling fan does not turn, the system will try to power up and then turn off when the power-on switch on the operator panel is pressed (but not when the switch on the power supply is pressed and held).

While holding the power supply switch do all the cooling fans turn?

NO Replace the faulty cooling fan. Go to "MAP 410: Repair Checkout" in the *RS/6000 and @server pSeries Diagnostics Information for Multiple Bus Systems*.

YES Exchange the operator panel electronics assembly. Go to “Step 1520-5.”

Step 1520-5

Press the power-on switch on the operator panel to turn on the power.

Does the power LED on the operator panel come on and stay on?

NO Reinstall the original operator panel electronics assembly. Go to “Step 1520-6.”

YES Go to "MAP 410: Repair Checkout" in the *RS/6000 and @server pSeries Diagnostics Information for Multiple Bus Systems*.

Step 1520-6

1. Unplug the power cord from the system unit.
2. Record the location of all the adapters. Label and record the location of any cables attached to the adapters. Remove all the adapters.
3. Remove all the memory cards.
4. If two processor cards are installed, remove the lower one.
5. Unplug the power cable from the SCSI backplane.
6. Unplug the power cables from all the SCSI devices.
7. Unplug the front and rear cooling fan power connectors.
8. Plug the power cord into the system unit.
9. Press the power-on switch on the operator panel to turn on the power.

Does the power LED on the operator panel come on and stay on?

NO Go to “Step 1520-7” on page 48.

YES Go to “Step 1520-8” on page 49.

Step 1520-7

Either the processor card, system board, I/O board, or power supply is defective.

To test each FRU, exchange the FRUs that have not already been exchanged in the following order:

1. Processor card
2. System board
3. I/O board
4. Power supply.

Press the power-on switch on the operator panel to turn on the power after each FRU is exchanged. If the power stays on, the most recently-exchanged FRU was causing the failure.

1. Unplug the power cord from the system unit.
2. Exchange one of the FRUs in the list.
3. Plug the power cord into the system unit.
4. Press the power-on switch on the operator panel to turn on the power.

Does the power LED on the operator panel come on and stay on?

NO Reinstall the original FRU.

Repeat this step until the defective FRU is identified or all the FRUs have been exchanged.

If the symptom did not change and all the FRUs have been exchanged, call service support for assistance.

If the symptom has changed, check for loose cards, cables, and obvious problems. If you do not find a problem, return to “Step 1520-1” on page 46 in this MAP and follow the instructions for the new symptom.

YES Go to "MAP 410: Repair Checkout" in the *RS/6000 and @server pSeries Diagnostics Information for Multiple Bus Systems*.

Step 1520-8

One of the parts that you removed or disconnected is probably defective. Install or connect the parts one at a time in the following order to identify the failing part:

1. Processor card
2. Memory card(s)
3. Front cooling fan
4. Rear cooling fan
5. SCSI backplane power cable.
6. SCSI power cable(s), lowest bay to highest bay.
7. Adapter cards, lowest slot to highest slot.

Press the power-on switch on the operator panel to turn on the power after each part is installed or connected. If the system does not power on or the power does not stay on, the most recently installed or connected part is causing the failure.

1. Turn off the power.
2. Unplug the power cord from the system unit.
3. Install or connect one of the parts in the list.
4. Plug the power cord into the system unit.
5. Press the start/stop switch on the operator panel to turn on the power.

Does the power LED on the operator panel come on and stay on?

NO Replace the last part you installed.

Repeat these steps until all the parts have been installed or connected.

If the symptom did not change and all the parts have been installed or connected, call your service support person for assistance.

If the symptom has changed, check for loose cards, cables, and obvious problems. If you do not find a problem, return to “Step 1520-1” on page 46 in this MAP and follow the instructions for the new symptom.

YES Go to "MAP 410: Repair Checkout" in the *RS/6000 and @server pSeries Diagnostics Information for Multiple Bus Systems*.

MAP 1540: Minimum Configuration

Notes:

1. Be sure to unplug the power cable before removing or installing processor card(s), memory card(s), system board or I/O board, to avoid damage to them.
2. This MAP assumes that a CD-ROM drive is installed and connected to the integrated SCSI adapter, and a diagnostic CD-ROM is available.
3. If a power-on password or privileged-access password is installed, you are prompted to enter the password before the diagnostic CD-ROM can load.
4. The term ″POST indicators″ refers to the icons (graphics display) or device mnemonics (ASCII terminal) that appear during the power-on self-test (POST).
5. The service processor might have recorded one or more symptoms in its error log. It is a good idea to examine that error log before proceeding (see Service Processor System Information Menu).
6. The service processor might have been set by the user to monitor server operations and to attempt recoveries. You might want to disable these actions while you diagnose and service the system. If you disable them, make notes of their current settings so that you can restore them before you leave. The following are the settings:

Surveillance	From the Service Processor Setup Menu, go to the Surveillance Setup Menu and disable surveillance.
Unattended Start Mode	From the Service Processor System Power Control Menu, disable unattended start mode.
Reboot Policy	From the System Power Control Menu, go to the Reboot/Restart Policy Setup Menu and set: 1. Number of reboot attempts to **0** (zero) 2. Use OS-Defined restart policy to **No** 3. Enable supplemental restart policy to **No**.
Call Out	From the Call-In/Call-Out Setup Menu, go to the Serial Port Selection Menu and disable call-out on both serial ports.

Purpose of this MAP

This MAP is used to locate defective FRUs not found by normal diagnostics. For this procedure, diagnostics are run on a minimally configured system. If a failure is detected on the minimally configured system, the remaining FRUs are exchanged one at a time until the failing FRU is identified. If a failure is not detected, FRUs are added back until the failure occurs. The failure is then isolated to the failing FRU.

Step 1540-1

1. Insert the diagnostic CD-ROM into the CD-ROM drive.

   Note: If you cannot insert the diagnostic CD-ROM, go to “Step 1540-2” on page 52.
2. Ensure that the diagnostics and the operating system are shut down.
3. Turn off the power.
4. Turn on the power.
5. When the keyboard indicator is displayed (the word **keyboard** on an ASCII terminal or the keyboard icon on a graphical display), press the F5 key on the directly attached keyboard or the number 5 key on an ASCII terminal.
6. Enter the appropriate password if you are prompted to do so.

Is the ″Please define the System Console″ screen displayed?

NO Go to “Step 1540-2” on page 52.

YES Go to “Step 1540-18” on page 66.

Step 1540-2

1. Turn off the power.
2. If you have not already done so, configure the service processor with the instructions in note 6 on page 50 and then return here and continue.
3. Exit service processor menus and remove the power cable.
4. Disconnect all external cables (parallel, serial port 1, serial port 2, keyboard, mouse, tablet, Ethernet, SCSI) from the I/O planar.
5. Remove the side cover.
6. Record the slot numbers of the PCI adapters. Label and record the location of any cables attached to the adapters. Disconnect any cables attached to the adapters and remove all the adapters.
7. Remove the second processor card from slot J8 (if present). (If the second processor card has been removed, ensure that the first processor card is installed.).
8. Record the slot numbers of the memory modules. Remove all installed memory modules except for one pair from the first memory card.

   Note: Memory modules must be reinstalled in pairs and in the correct slots. For example, install the first pair in slots J1 and J2.
9. Remove the second memory card from slot J2, if present.
10. Disconnect the SCSI cable from the SCSI connector (J7) on the I/O board.
11. Disconnect the signal and power connectors from the disk drive cage backplane.
12. Remove the disk drive(s) from the disk drive cage.
13. Disconnect the signal and power connectors from all the SCSI devices except the CD-ROM drive.
14. Disconnect the diskette drive cable from the diskette drive connector (J17) on the I/O board.
15. Plug in the power cable (and wait for OK on the operator panel display).
16. Turn on the power.

Does the system stop with code E1F2, E1F3, STBY or 4BA00830 displayed on the operator panel?

NO Go to “Step 1540-3” on page 53.

YES If a second processor card was removed, go to “Step 1540-4” on page 54.

If the system has only one processor card, go to “Step 1540-5” on page 54.

Step 1540-3

One of the FRUs remaining in the system unit is defective.

If a memory module is exchanged, ensure that the new module is the same size and speed as the original module.

1. Turn off the power, remove the power cable, and exchange the FRUs in the following order:
   - Processor card
   - Memory modules in odd numbered slots (J1, J3, J5, and so on.)
   - Memory modules in even numbered slots (J2, J4, J6, and so on.)
   - Memory card
   - System board
   - I/O board (see note 4 on page 27)
   - Power supply.
2. Plug in the power cable (and wait for OK on the operator panel display).
3. Turn on the power.

Does the system stop with code E1F2, E1F3, STBY or 4BA00830 displayed on the operator panel?

NO Reinstall the original FRU.

Repeat the FRU replacement steps until the defective FRU is identified or all the FRUs have been exchanged.

If the symptom did not change and all the FRUs have been exchanged, call service support for assistance.

If the symptom has changed, check for loose cards, cables, and obvious problems. If you do not find a problem, return to “Step 1540-1” on page 51 in this MAP and follow the instructions for the new symptom.

YES Go to "MAP 410: Repair Checkout" in the *RS/6000 and @server pSeries Diagnostics Information for Multiple Bus Systems*.

Step 1540-4

No failure was detected with this configuration.

1. Turn off the power and remove the power cable.
2. Reinstall the second processor card.
3. Plug in the power cable (and wait for OK on the operator panel display).
4. Turn on the power.

Does the system stop with code E1F2, E1F3, STBY or 4BA00830 displayed on the operator panel?

NO One of the FRUs remaining in the system unit is defective.

In the following order, exchange the FRUs that have not been exchanged:

1. Processor card (last one installed)
2. System board
3. I/O board (See note 4 on page 27.)

Repeat this step until the defective FRU is identified or all the FRUs have been exchanged.

If the symptom did not change and all the FRUs have been exchanged, call your service support person for assistance.

If the symptom changed, check for loose cards and obvious problems. If you do not find a problem, return to "Step 1540-1" on page 51 and follow the instructions for the new symptom.

YES Go to "Step 1540-5."

Step 1540-5

No failure was detected with this configuration.

1. Turn off the power and remove the power cable.
2. Install a pair of memory modules.
3. Plug in the power cable (and wait for OK on the operator panel display).
4. Turn on the power.

Does the system stop with code E1F2, E1F3, STBY or 4BA00830 displayed on the operator panel?

NO Go to "Step 1540-6" on page 55.

YES Repeat this step until all the memory modules are installed and tested.

After all the memory modules are installed and tested, record the positions of the memory modules on the second memory card. Remove all of the memory modules from the second memory card except one pair. Repeat this step with the second memory card (if previously installed).

Go to "Step 1540-9" on page 57.

Step 1540-6

The failure might be caused by the last pair of memory modules installed or the memory card. To isolate the failing FRU, do the following:

1. Turn off the power and remove the power cable.
2. Exchange the last memory module pair installed.
3. Reinstall the power cable.
4. Turn on the power.

Does the system stop with code E1F2, E1F3, STBY or 4BA00830 displayed on the operator panel?

NO Go to “Step 1540-8” on page 56.

YES Go to “Step 1540-7.”

Step 1540-7

One or both of the memory modules that you exchanged in the previous step might be defective. To isolate the failing memory module, do the following:

1. Turn off the power and remove the power cable.
2. Reinstall one of the memory modules you installed in the previous step.
3. Plug in the power cable (and wait for OK on the operator panel display).
4. Turn on the power.

Does the system stop with code E1F2, E1F3, STBY or 4BA00830 displayed on the operator panel?

NO Replace the memory module.

If you have not tested both memory modules, repeat this step with the second memory module you exchanged in the previous step.

If the symptom did not change and both memory modules have been exchanged, go to “Step 1540-8” on page 56.

YES Repeat this step with the second memory module you exchanged in the previous step.

If both memory modules have been tested, go to "MAP 410: Repair Checkout" in the *RS/6000 and @server pSeries Diagnostics Information for Multiple Bus Systems*.

Step 1540-8

One of the FRUs remaining in the system unit is defective.

1. Turn off the power and remove the power cable.
2. Exchange the FRUs in the following order:
   a. Memory card
   b. System board
   c. I/O board (see note 4 on page 27).
   d. Power supply.
3. Plug in the power cable (and wait for OK on the operator panel display).
4. Turn on the power.

Does the system stop with code E1F2, E1F3, STBY or 4BA00830 displayed on the operator panel?

NO Reinstall the original FRU.

Repeat this step until the defective FRU is identified or all the FRUs have been exchanged.

If the symptom did not change and all the FRUs have been exchanged, call service support for assistance.

If the symptom has changed, check for loose cards, cables, and obvious problems. If you do not find a problem, return to “Step 1540-1” on page 51 in this MAP, and follow the instructions for the new symptom.

YES Go to "MAP 410: Repair Checkout" in the *RS/6000 and @server pSeries Diagnostics Information for Multiple Bus Systems*.

Step 1540-9

1. Turn off the power.
2. Reconnect the system console.

   Notes:

   a. If an ASCII terminal has been defined as the system console, attach the ASCII terminal cable to the S1 connector on the rear of the system unit.

   b. If a display attached to a display adapter has been defined as the system console, install the display adapter and connect the display to it. Plug the keyboard into the keyboard connector on the rear of the system unit.
3. Turn on the power.
4. If the ASCII terminal or graphics display (including display adapter) is connected differently than it was previously, the Console Selection screen appears and requires that a new console be selected.
5. When the keyboard indicator is displayed, press the F1 key on the directly attached keyboard or the number 1 key on an ASCII terminal to start the system management services.
6. Enter the appropriate password if you are prompted to do so.

Is the SMS screen displayed?

NO One of the FRUs remaining in the system unit is defective.

In the following order, exchange the FRUs that have not been exchanged:

1. Go to the problem determination procedures (test procedures) for the device attached to the S1 serial port or the display attached to the graphics adapter, and test that device. If a problem is found, follow the procedures for correcting the problem on that device.
2. Graphics adapter (if installed).
3. Cable (async or graphics).
4. I/O board (see note 4 on page 27.)

Repeat this step until the defective FRU is identified or all the FRUs have been exchanged.

If the symptom did not change and all the FRUs have been exchanged, call service support for assistance.

If the symptom changed, check for loose cards and obvious problems. If you do not find a problem, return to “Step 1540-1” on page 51 and follow the instructions for the new symptom.

YES Go to “Step 1540-10” on page 58.

Step 1540-10

1. Make sure the diagnostic CD-ROM is inserted into the CD-ROM drive.
2. Turn off the power and remove the power cable.
3. Plug the SCSI cable into the SCSI connector (J7) on the I/O board.
4. Plug in the power cable (and wait for OK on the operator panel display).
5. Turn on the power.
6. After the keyboard indicator is displayed, press the F5 key on the directly attached keyboard or the number 5 key on an ASCII terminal keyboard.
7. Enter the appropriate password if you are prompted to do so.

Is the ″Please define the System Console″ screen displayed?

NO One of the FRUs remaining in the system unit is defective.

In the following order, exchange the FRUs that have not been exchanged:

1. SCSI cable
2. CD-ROM drive
3. I/O board (see note 4 on page 27)
4. Processor card
5. Power supply.

Repeat this step until the defective FRU is identified or all the FRUs have been exchanged.

If the symptom did not change and all the FRUs have been exchanged, call service support for assistance.

If the symptom has changed, check for loose cards, cables, and obvious problems. If you do not find a problem, return to “Step 1540-1” on page 51 in this MAP and follow the instructions for the new symptom.

YES Go to “Step 1540-11” on page 59.

Step 1540-11

The system is working correctly with this configuration. One of the SCSI devices that you disconnected might be defective.

1. Make sure the diagnostic CD-ROM is inserted into the CD-ROM drive.
2. Turn off the power and remove the power cable.
3. Connect the signal and power connectors to one of the SCSI devices (CD-ROM drive, tape drive, disk drive, and so on.) Do not connect the signal and power connectors to the backplane at this time.
4. Plug in the power cable (and wait for OK on the operator panel display).
5. Turn on the power.
6. After the keyboard indicator is displayed, press the F5 key on the directly attached keyboard or the number 5 key on an ASCII terminal keyboard.
7. Enter the appropriate password if you are prompted to do so.

Is the ″Please define the System Console″ screen displayed?

NO One of the FRUs remaining in the system unit is defective.

In the following order, exchange the FRUs that have not been exchanged.

1. SCSI cable
2. Last SCSI device connected (CD-ROM drive, tape drive, and so on)
3. I/O board (see note 4 on page 27)
4. Processor card
5. Power supply.

Repeat this step until the defective FRU is identified or all the FRUs have been exchanged.

If the symptom did not change and all the FRUs have been exchanged, call service support for assistance.

If the symptom has changed, check for loose cards, cables, and obvious problems. If you do not find a problem, return to “Step 1540-1” on page 51 in this MAP and follow the instructions for the new symptom.

YES Repeat this step, adding one SCSI device at a time, until all the SCSI devices that were attached to the integrated SCSI adapter, except the backplane, are connected and tested.

Go to “Step 1540-12” on page 60.

Step 1540-12

The system is working correctly with this configuration. The backplane may be defective.

1. Make sure the diagnostic CD-ROM is inserted into the CD-ROM drive.
2. Turn off the power and remove the power cable.
3. Connect the signal and power connectors to the backplane.
4. Plug in the power cable (and wait for OK on the operator panel display)
5. Turn on the power.
6. After the keyboard indicator is displayed, press the F5 key on the directly attached keyboard or the number 5 key on an ASCII terminal keyboard.
7. Enter the appropriate password if you are prompted to do so.

Is the ″Please define the System Console″ screen displayed?

NO One of the FRUs remaining in the system unit is defective.

In the following order, exchange the FRUs that have not been exchanged.

1. SCSI cable
2. Disk drive cage backplane

Repeat this step until the defective FRU is identified or all the FRUs have been exchanged.

If the symptom did not change and all the FRUs have been exchanged, call service support for assistance.

If the symptom has changed, check for loose cards, cables, and obvious problems. If you do not find a problem, return to “Step 1540-1” on page 51 in this MAP and follow the instructions for the new symptom.

YES Go to “Step 1540-13” on page 61.

Step 1540-13

The system is working correctly with this configuration. One of the disk drives that you removed from the disk cage might be defective.

1. Make sure the diagnostic CD-ROM is inserted into the CD-ROM drive.
2. Turn off the power and remove the power cable.
3. Install a disk drive in the disk drive cage.
4. Plug in the power cable (and wait for OK on the operator panel display).
5. Turn on the power.
6. After the keyboard indicator is displayed, press the F5 key on the directly attached keyboard or the number 5 key on an ASCII terminal keyboard.
7. Enter the appropriate password if you are prompted to do so.

Is the ″Please define the System Console″ screen displayed?

NO In the following order, exchange the FRUs that have not been exchanged.

1. Last disk drive installed
2. Disk drive cage backplane

Repeat this step until the defective FRU is identified or all the FRUs have been exchanged.

If the symptom did not change and all the FRUs have been exchanged, call service support for assistance.

If the symptom has changed, check for loose cards, cables, and obvious problems. If you do not find a problem, return to “Step 1540-1” on page 51 in this MAP, and follow the instructions for the new symptom.

YES Repeat this step with the second disk drive (if it was installed).

Go to “Step 1540-14” on page 62.

Step 1540-14

The system is working correctly with this configuration. The diskette drive might be defective.

1. Make sure the diagnostic CD-ROM is inserted into the CD-ROM drive.
2. Turn off the power and remove the power cable.
3. Plug the diskette drive cable into the diskette drive connector (J17) on the I/O board.
4. Plug in the power cable (and wait for OK on the operator panel display).
5. Turn on the power.
6. After the keyboard indicator is displayed, press the F5 key on the directly attached keyboard or the number 5 key on an ASCII terminal keyboard.
7. Enter the appropriate password if you are prompted to do so.

Is the ″Please define the System Console″ screen displayed?

NO One of the FRUs remaining in the system is defective.

In the following order, exchange the FRUs that have not been exchanged.

1. Diskette drive
2. Diskette drive cable
3. I/O board (see note 4 on page 27)
4. Power supply

Repeat this step until the defective FRU is identified or all the FRUs have been exchanged.

If the symptom did not change and all the FRUs have been exchanged, call service support for assistance.

If the symptom has changed, check for loose cards, cables, and obvious problems. If you do not find a problem, return to “Step 1540-1” on page 51 in this MAP and follow the instructions for the new symptom.

YES Go to “Step 1540-15” on page 63.

Step 1540-15

The system is working correctly with this configuration. One of the devices that you disconnected from the I/O board may be defective.

1. Turn off the power and remove the power cable.
2. Attach an I/O board device cable (parallel, serial port 1, serial port 2, AUI/RJ45 Ethernet, Ultra-2 SCSI, tablet, keyboard or mouse) that had been removed.
3. Plug in the power cable (and wait for OK on the operator panel display).
4. Turn on the power.
5. If the Console Selection screen displays, choose the system console.
6. After the keyboard indicator is displayed, press the F5 key on the directly attached keyboard or the number 5 key on an ASCII terminal keyboard.
7. Enter the appropriate password if you are prompted to do so.

Is the ″Please define the System Console″ screen displayed?

NO The last device or cable that you attached is defective.

To test each FRU, exchange the FRUs in the following order:

1. Device and cable (last one attached)
2. I/O board (see note 4 on page 27).

If the symptom did not change and all the FRUs have been exchanged, call service support for assistance.

If the symptom has changed, check for loose cards, cables, and obvious problems. If you do not find a problem, return to “Step 1540-1” on page 51 in this MAP and follow the instructions for the new symptom.

Go to ″Map 0410: Repair Checkout″ in the *RS/6000 and @server pSeries Diagnostics Information for Multiple Bus Systems*.

YES Repeat this step until all of the devices are attached.

Go to “Step 1540-16” on page 64.

Step 1540-16

The system is working correctly with this configuration. One of the FRUs (adapters) that you removed is probably defective.

1. Turn off the power and remove the power cable.
2. Install a FRU (adapter) and connect any cables and devices that were attached to it.
3. Plug in the power cable (and wait for OK on the operator panel display)
4. Turn on the power.
5. If the Console Selection screen is displayed, choose the system console.
6. After the keyboard indicator appears, press the F5 key on the directly attached keyboard or the number 5 key on an ASCII terminal keyboard.
7. Enter the appropriate password if you are prompted to do so.

Is the ″Please define the System Console″ screen displayed?

NO Go to “Step 1540-17” on page 65.

YES Repeat this step until all of the FRUs (adapters) are installed.

Go to "MAP 410: Repair Checkout" in the *RS/6000 and @server pSeries Diagnostics Information for Multiple Bus Systems*.

Step 1540-17

The last FRU installed or one of its attached devices is probably defective.

1. Make sure the diagnostic CD-ROM disc is inserted into the CD-ROM drive.
2. Turn off the power and remove the power cable.
3. Starting with the last installed adapter, disconnect one attached device and cable.
4. Plug in the power cable (and wait for OK on the operator panel display)
5. Turn on the power.
6. If the Console Selection screen is displayed, choose the system console.
7. After the keyboard indicator is displayed, press the F5 key on the directly attached keyboard or the number 5 key on an ASCII terminal keyboard.
8. Enter the appropriate password if you are prompted to do so.

Is the ″Please define the System Console″ screen displayed?

NO Repeat this step until the defective device or cable is identified or all the devices and cables have been disconnected.

If all the devices and cables have been removed, then one of the FRUs remaining in the system unit is defective.

To test each FRU, exchange the FRUs in the following order:

1. Adapter (last one installed)
2. I/O board (see note 4 on page 27)
3. Power supply

If the symptom did not change and all the FRUs have been exchanged, call service support for assistance.

If the symptom has changed, check for loose cards, cables, and obvious problems. If you do not find a problem, return to “Step 1540-1” on page 51 in this MAP and follow the instructions for the new symptom.

YES The last device or cable that you disconnected is defective.

Exchange the defective device or cable.

Go to ″Map 0410: Repair Checkout″ in the *RS/6000 and @server pSeries Diagnostics Information for Multiple Bus Systems*.

Step 1540-18

1. Follow the instructions on the screen to select the system console.
2. When the DIAGNOSTIC OPERATING INSTRUCTIONS screen is displayed, press Enter.
3. If the terminal type has not been defined, you must use the **Initialize Terminal** option on the FUNCTION SELECTION menu to initialize the AIX operating system environment before you can continue with the diagnostics.
4. Select **Advanced Diagnostics Routines**.
5. If the NEW RESOURCE screen displays, select an option from the bottom of the screen.

   Note: Adapters or devices that require supplemental media are not shown in the new resource list. If the system has adapters or devices that require supplemental media, select option 1.
6. When the DIAGNOSTIC MODE SELECTION screen displays, press Enter.
7. Select **All Resources** (if you were sent here from “Step 1540-22” on page 67, select the adapter/device you loaded from the supplemental media).

Did you get an SRN?

NO Go to “Step 1540-20” on page 67.

YES Go to “Step 1540-19.”

Step 1540-19

Look at the FRU part numbers associated with the SRN.

Have you exchanged all the FRUs that correspond to the failing function codes?

NO Exchange the FRU with the highest failure percentage that has not been changed.

Repeat this step until all the FRUs associated with the SRN have been exchanged or diagnostics run with no trouble found. Run diagnostics after each FRU is exchanged.

If the I/O board or a network adapter is replaced, see note 4 on page 27.

Go to "MAP 410: Repair Checkout" in the *RS/6000 and @server pSeries Diagnostics Information for Multiple Bus Systems*.

YES If the symptom did not change and all the FRUs have been exchanged, call service support for assistance.

Step 1540-20

Does the system have adapters or devices that require supplemental media?

NO Go to “Step 1540-21.”

YES Go to “Step 1540-22.”

Step 1540-21

Consult the PCI adapter configuration documentation for your operating system to verify that all installed adapters are configured correctly.

Go to "MAP 410: Repair Checkout" in the *RS/6000 and @server pSeries Diagnostics Information for Multiple Bus Systems*.

If the symptom did not change and all the FRUs have been exchanged, call service support for assistance.

Step 1540-22

1. Select **Task Selection**.
2. Select **Process Supplemental Media** and follow the onscreen instructions to process the media.
3. Supplemental media must be loaded and processed one at a time.

Did the system return to the TASKS SELECTION SCREEN after the supplemental media was processed?

NO Go to “Step 1540-23” on page 68.

YES Press F3 to return to the FUNCTION SELECTION screen.

Go to Step 1540-18 substep 4 on page 66.

Step 1540-23

The adapter or device is probably defective.

If the supplemental media is for an adapter, replace the FRUs in the following order:

1. Adapter
2. I/O board (see note 4 on page 27).

If the supplemental media is for a device, replace the FRUs in the following order:

1. Device and any associated cables.
2. The adapter the device is attached to.

Repeat this step until the defective FRU is identified or all the FRUs have been exchanged.

If the symptom did not change and all the FRUs have been exchanged, call service support for assistance.

If the symptom has changed, check for loose cards, cables, and obvious problems. If you do not find a problem, return to “Step 1540-1” on page 51 for the new symptom.

Go to "MAP 410: Repair Checkout" in the *RS/6000 and @server pSeries Diagnostics Information for Multiple Bus Systems*.

Step 1540-24

1. Ensure that the diagnostics and the operating system are shut down.
2. Turn off the power.
3. If you have not already done so, configure the service processor with the instructions from Note 6 in “MAP 1540: Minimum Configuration” on page 50 and then return here and continue.
4. Exit service processor menus and remove the power cable.
5. Remove the side cover.
6. Record the slot numbers of the PCI adapters. Label and record the location of any cables attached to the adapters. Disconnect any cables attached to the adapters and remove all the adapters.
7. Plug the power cable into a power outlet (and wait for OK on the operator panel display).
8. Turn on the power.

Does the system stop with code 4B2xxx00 or 4B2xxx10 displayed on the operator panel?

NO Go to “Step 1540-26” on page 69.

YES Go to “Step 1540-25” on page 69.

Step 1540-25

One of the FRUs remaining in the system unit is defective.

1. Turn off the power, remove the power cable, and exchange the FRUs in the following order:
   a. System board
   b. I/O board (see note 4 on page 27)
2. Plug in the power cable (and wait for OK on the operator panel display).
3. Turn on the power.

Does the system stop with code 4B2xxx00 or 4B2xxx10 displayed on the operator panel?

NO Go to "MAP 410: Repair Checkout" in the *RS/6000 and @server pSeries Diagnostics Information for Multiple Bus Systems*.

YES Reinstall the original FRU.

Repeat the FRU replacement steps until the defective FRU is identified or all the FRUs have been exchanged.

If the symptom did not change and all the FRUs have been exchanged, go to “Step 1540-2” on page 52.

Step 1540-26

The system is working correctly with this configuration. One of the FRUs (adapters) that you removed is probably defective.

1. Turn off the power and remove the power cable from the power outlet.
2. Install a FRU (adapter) and connect any cables and devices that were attached to it.
3. Plug in the power cable (and wait for OK on the operator panel display).
4. Turn on the power.
5. If the Console Selection screen displays, choose the system console.
6. Enter the appropriate password if you are prompted to do so.

Does the system stop with code 4B2xxx00 or 4B2xxx10 displayed on the operator panel?

NO Repeat this step until all of the FRUs (adapters) are installed, then go to "MAP 410: Repair Checkout" in the *RS/6000 and @server pSeries Diagnostics Information for Multiple Bus Systems*.

YES Go to “Step 1540-27” on page 70.

Step 1540-27

The last FRU installed or one of its attached devices is probably defective.

1. Turn off the power and remove the power cable from the power outlet.
2. Starting with the last installed adapter, disconnect one attached device and cable.
3. Plug in the power cable (and wait for OK on the operator panel display).
4. Turn on the power.
5. If the Console Selection screen displays, choose the system console.
6. Enter the appropriate password if you are prompted to do so.

Does the system stop with code 4B2xxx00 or 4B2xxx10 displayed on the operator panel?

NO The last device or cable that you disconnected is defective.

Exchange the defective device or cable.

Go to "MAP 410: Repair Checkout" in the *RS/6000 and @server pSeries Diagnostics Information for Multiple Bus Systems*.

YES Repeat this step until the defective device or cable is identified or all the devices and cables have been disconnected.

If all the devices and cables have been removed, then one of the FRUs remaining in the system is defective.

To test each FRU, exchange the FRUs in the following order:

1. Adapter (last one installed)
2. I/O board (see note 4 on page 27).

If the symptom did not change and all the FRUs have been exchanged, go to “Step 1540-2” on page 52.

Chapter 4. Checkpoints

Checkpoints let users and service personnel know what the system is doing, with some detail, as it initializes. These checkpoints are not intended to be error indicators, but in some cases the system could hang at one of the checkpoints without displaying an 8-character error code. It is for these hang conditions, only, that any action should be taken with respect to checkpoints. The most appropriate action is included with each checkpoint.

Before taking actions listed with a checkpoint, it is a good idea to look for more appropriate symptoms in the service processor error log. See Chapter 7, “Using the Service Processor,” on page 149.

Service Processor Checkpoints

Service processor checkpoints are in the range E001 to E0FF. The message **OK** indicates successful service processor testing and initialization. Firmware checkpoints are listed in “Firmware Checkpoints” on page 75.

Note: Go to “MAP 1540: Minimum Configuration” on page 50 for any of the following conditions:

- A four-digit code in the range of E001 through EFFF displays on the operator panel but is not listed in the checkpoint table.
- A four-digit code displays in the checkpoint table, but does not contain a repair action or FRU listing.
- All of the FRUs listed in the repair action have been replaced and the problem has not been corrected.

If you replace FRUs or perform an action, and the problem is corrected, go to "MAP 410: Repair Checkout" in the *RS/6000 and @server pSeries Diagnostics Information for Multiple Bus Systems*.

Table 1. Service Processor Checkpoints.

Checkpoint	Description	Action/ Possible Failing FRU
E000	System support controller begins operation. This is an informational checkpoint.	Call for support.
E010	Starting service processor self-tests	Replace I/O board. (See notes on page 93.)
E011	Service processor self-tests completed successfully	Call for support.
E012	Begin to set up service processor helps	Replace I/O board. (See notes on page 93.)
E01F	Bad self-test; cannot continue	Replace I/O board. (See notes on page 93.)

Table 1. Service Processor Checkpoints. (continued)

Checkpoint	Description	Action/ Possible Failing FRU
E020	Configuring CMOS	Replace I/O board. (See notes on page 93.)
E021	Configuring NVRAM	1. Manually drain the NVRAM by removing the battery and short-the battery leads for 30 seconds with a conductive object (the battery will work for this purpose). 2. Replace I/O board. (See notes on page 93.)
E022	Accessing system backplane VPD	Replace the system board.
E023	Accessing memory card 1 VPD	Replace memory card 1 (J3).
E024	Accessing memory card 2 VPD	Replace memory card 2 (J2).
E025	Service processor accessing VPD on memory card 1	Replace I/O board. (See notes on page 93.)
E026	Service processor accessing VPD on memory card 2	Replace I/O board. (See notes on page 93.)
E030	Beginning to build I2C resources	1. Replace processor card. 2. Replace I/O board. (See notes on page 93.)
E031	Finished building resources	1. Replace processor card. 2. Replace I/O board. (See notes on page 93.)
E032	JTAG self-test	Replace I/O board. (See notes on page 93.)
E040	Starting serial port tests	Replace I/O board. (See notes on page 93.)
E042	Configuring serial port 1	Replace I/O board. (See notes on page 93.)
E043	Configuring serial port 2	Replace I/O board. (See notes on page 93.)
E044	Preparing to set serial port line speed	Replace I/O board. (See notes on page 93.)
E045	Preparing to disconnect serial port.	Replace I/O board. (See notes on page 93.)
E050	Reading system VPD.	Replace operator panel. (See notes on page 93.)
E051	Reading processor VPD.	Replace processor card.
E052	Reading memory card and DIMM VPD.	Replace memory card(s) and/or DIMMs.
E053	Reading system board VPD.	Replace system board.
E054	Reading NIO expansion board VPD.	Replace NIO expansion board (wide node only).

Table 1. Service Processor Checkpoints. (continued)

Checkpoint	Description	Action/ Possible Failing FRU
E055	Reading power supply VPD.	Replace power supply.
E060	Preparing to auto power-on (AC restored)	1. I/O board. (See notes on page 93.) 2. Processor card.
E061	Preparing to auto power-on (timer)	1. I/O board. (See notes on page 93.) 2. Processor card.
E070	Configuring modem	1. Try another modem configuration from the service processor menus. 2. Check the cabling between the modem and the system. 3. Replace modem. 4. Replace I/O board. (See notes on page 93.)
E072	Preparing to call home	1. Try another modem configuration from the service processor menus. 2. Check the cabling between the modem and the system. 3. Replace modem. 4. Replace I/O board. (See notes on page 93.)
E075	Entering service processor menus	1. Verify that the cabling connecting the terminal to the system serial port is correct. 2. Cycle ac power to the system. 3. Clear NVRAM, then recycle ac power to the system. 4. Verify that the terminal being used is functional. 5. Try above repair actions using an alternate terminal. 6. Replace I/O board. (See notes on page 93.)
E076	Leaving service processor menus; attempting to disconnect modems	1. Try another modem configuration from the service processor menus. 2. Check the cabling between the modem and the system. 3. Replace modem. 4. Replace I/O board. (See notes on page 93.)
E080	System firmware corruption	1. Replace I/O board.

Table 1. Service Processor Checkpoints. (continued)

Checkpoint	Description	Action/ Possible Failing FRU
E081	Flash update completed - system reboot in progress.	1. Cycle ac power and attempt a reboot. 2. Retry a service processor emergency flash update (if possible) as documented in checkpoint code E080. 3. Replace I/O board. (See notes on page 93.)
E0A0	Beginning bring-up phase	1. Replace processor card(s). 2. Replace I/O board. (See notes on page 93.)
E0B0	Starting processor BIST	1. Consult the service processor error logs for potential failing FRUs. 2. Replace processor card. 3. Replace I/O board. (See notes on page 93.)
E0C0	Starting X5 BIST	1. Replace processor card. 2. Replace I/O board. (See notes on page 93.)
E0D0	Creating JTAG scanlog (failure diagnostic information).	
E0E0	Beginning to pull processor card out of reset state.	1. Replace processor card(s). 2. Replace I/O board. (See note on page 93.)
E0E1	Processor card pulled out successfully of reset.	1. Remove processor card in slot (J8) (if installed) and see if the problem is resolved. If problem is resolved replace processor card. If not, continue. 2. Exchange processor card in slot (J6) with the processor card removed in step 1 (or replace processor card if only one processor card exists) and see if problem is resolved. If problem is resolved replace the processor card. If not, continue. 3. Go to “MAP 1540: Minimum Configuration” on page 50.
DIAG STBY	Service processor ready. The system unit was shutdown in service mode by the operating system; however, the system unit is still powered on.	This condition can be requested by a privileged system user with no faults. See service processor error log for possible operating system fault indications.
OK	Service processor ready; waiting for power-on	None. Normal operation.

Table 1. Service Processor Checkpoints. (continued)

Checkpoint	Description	Action/ Possible Failing FRU
STBY	Service processor ready. System was shutdown by the operating system and is still powered on.	1. If this problem persists, go to"MAP 1540: Minimum Configuration" on page 50. 2. This condition can be requested by a privileged system user with no faults. See service processor error log for possible operating system fault indications.

Firmware Checkpoints

Firmware uses progress codes (checkpoints) in the range of E1xx to EFFF. These checkpoints occur during system startup and can be useful in diagnosing certain problems. Service processor checkpoints are listed in "Service Processor Checkpoints" on page 71.

If you replace FRUs and the problem is still not corrected, go to "MAP 1540: Minimum Configuration" on page 50 unless otherwise indicated in the tables.

If you replace FRUs or perform an action, and the problem is corrected, go to "MAP 410: Repair Checkout" in the *RS/6000 and @server pSeries Diagnostics Information for Multiple Bus Systems*.

Table 2. Firmware Checkpoints.

Checkpoint	Description	Action/ Possible Failing FRU
E100	Reserved	Go to "MAP 1540: Minimum Configuration" on page 50.
E101	Video enabled, extended memory test	Go to "MAP 1540: Minimum Configuration" on page 50.
E102	Firmware restart	Go to "MAP 1540: Minimum Configuration" on page 50.
E103	Set memory refresh (composite img)	Go to "MAP 1540: Minimum Configuration" on page 50.
E104	Set memory refresh (recovery block)	Go to "MAP 1540: Minimum Configuration" on page 50.
E105	Transfer control to operating system (normal boot).	See "Boot Problems/Concerns" on page 89.
E108	Run recovery block base memory (test 2K), set stack	Go to "MAP 1540: Minimum Configuration" on page 50.
E109	Copy CRC verification code to RAM	Go to "MAP 1540: Minimum Configuration" on page 50.
E10A	Turn on cache	Go to "MAP 1540: Minimum Configuration" on page 50.

Table 2. Firmware Checkpoints. (continued)

Checkpoint	Description	Action/ Possible Failing FRU
E10B	Flush cache	Go to “MAP 1540: Minimum Configuration” on page 50.
E10C	Jump to CRC verification code in RAM	Go to “MAP 1540: Minimum Configuration” on page 50.
E10D	Compute composite image CRC	Go to “MAP 1540: Minimum Configuration” on page 50.
E10E	Jump back to ROM	Go to “MAP 1540: Minimum Configuration” on page 50.
E10F	Transfer control to open firmware	Go to “MAP 1540: Minimum Configuration” on page 50.
E110	Turn off cache. Check if composite image CRC is valid	Go to “MAP 1540: Minimum Configuration” on page 50.
E111	Good CRC - jump to composite image	Go to “MAP 1540: Minimum Configuration” on page 50.
E112	Bad CRC - initialize base memory, stack	Go to “MAP 1540: Minimum Configuration” on page 50.
E113	Bad CRC - copy uncompressed recovery block code to RAM	Go to “MAP 1540: Minimum Configuration” on page 50.
E114	Bad CRC - jump to code in RAM	Go to “MAP 1540: Minimum Configuration” on page 50.
E115	Bad CRC - turn on cache	Go to “MAP 1540: Minimum Configuration” on page 50.
E116	Bad CRC - copy recovery block data section to RAM	Go to “MAP 1540: Minimum Configuration” on page 50.
E117	Bad CRC - Invalidate and flush cache, set TOC	Go to “MAP 1540: Minimum Configuration” on page 50.
E118	Bad CRC - branch to high level recovery control routine.	Go to “MAP 1540: Minimum Configuration” on page 50.
E119	Initialize base memory, stack	Go to “MAP 1540: Minimum Configuration” on page 50.
E11A	Copy uncompressed recovery block code to RAM	Go to “MAP 1540: Minimum Configuration” on page 50.
E11B	Jump to code in RAM	Go to “MAP 1540: Minimum Configuration” on page 50.
E11C	Turn on cache	Go to “MAP 1540: Minimum Configuration” on page 50.
E11D	Copy recovery block data section to RAM	Go to “MAP 1540: Minimum Configuration” on page 50.
E11E	Invalidate and flush cache, set TOC	Go to “MAP 1540: Minimum Configuration” on page 50.
E11F	Branch to high level control routine.	Go to “MAP 1540: Minimum Configuration” on page 50.

Table 2. Firmware Checkpoints. (continued)

Checkpoint	Description	Action/ Possible Failing FRU
E120	Initialize I/O and early memory block	Go to “MAP 1540: Minimum Configuration” on page 50.
E121	Initialize service processor	Go to “MAP 1540: Minimum Configuration” on page 50.
E122	No memory detected (system lockup) Note: Disk drive light is on continuously.	Go to “MAP 1240: Memory Problem Resolution” on page 39.
E123	No memory module found in socket.	Go to “MAP 1540: Minimum Configuration” on page 50.
E124	Disable defective memory bank	Go to “MAP 1540: Minimum Configuration” on page 50.
E125	Clear PCI devices command reg, go forth	Go to “MAP 1540: Minimum Configuration” on page 50.
E126	Check valid image - start	Go to “MAP 1540: Minimum Configuration” on page 50.
E127	Check valid image - successful	Go to “MAP 1540: Minimum Configuration” on page 50.
E128	Disable interrupts, set int vectors for open firmware.	Go to “MAP 1540: Minimum Configuration” on page 50.
E129	Validate target RAM address	Go to “MAP 1540: Minimum Configuration” on page 50.
E12A	Copy ROM to RAM, flush cache	Go to “MAP 1540: Minimum Configuration” on page 50.
E12B	Set MP operational parameters	Go to “MAP 1540: Minimum Configuration” on page 50.
E12C	Set MP CPU node characteristics	Go to “MAP 1540: Minimum Configuration” on page 50.
E12D	Park secondary processors in parking lot	Go to “MAP 1540: Minimum Configuration” on page 50.
E12E	Primary processor sync	Go to “MAP 1540: Minimum Configuration” on page 50.
E12F	Unexpected return from open firmware (system lockup)	Go to “MAP 1540: Minimum Configuration” on page 50.
E130	Build device tree	Go to “MAP 1540: Minimum Configuration” on page 50.
E131	Create root node	Go to “MAP 1540: Minimum Configuration” on page 50.
E132	Create CPU’s node	Go to “MAP 1540: Minimum Configuration” on page 50.
E133	Create L2 cache node	Go to “MAP 1540: Minimum Configuration” on page 50.
E134	Create memory node	Go to “MAP 1540: Minimum Configuration” on page 50.

Table 2. Firmware Checkpoints. (continued)

Checkpoint	Description	Action/ Possible Failing FRU
E135	Create memory module node	Go to “MAP 1540: Minimum Configuration” on page 50.
E136	Test memory	Go to “MAP 1540: Minimum Configuration” on page 50.
E137	Create openprom node	Go to “MAP 1540: Minimum Configuration” on page 50.
E138	Create options node	Go to “MAP 1540: Minimum Configuration” on page 50.
E139	Create aliases node and system aliases	Go to “MAP 1540: Minimum Configuration” on page 50.
E13A	Create packages node	Go to “MAP 1540: Minimum Configuration” on page 50.
E140	PReP- style load	Go to “MAP 1540: Minimum Configuration” on page 50.
E149	Create boot mgr node	Go to “MAP 1540: Minimum Configuration” on page 50.
E14C	Create terminal-emulator node	Go to “MAP 1540: Minimum Configuration” on page 50.
E14D	Load boot image	See “Boot Problems/Concerns” on page 89.
E14E	Create client interface node/directory	Go to “MAP 1540: Minimum Configuration” on page 50.
E14F	NVRAM validation, config variable token generation	Go to “MAP 1540: Minimum Configuration” on page 50.
E150	Create host (primary) PCI controller node	Go to “MAP 1540: Minimum Configuration” on page 50.
E151	Probing primary PCI bus	Go to “MAP 1540: Minimum Configuration” on page 50. If a network adapter or I/O board is replaced, on page71.
E152	Probe for adapter FCODE, evaluate if present	Go to “MAP 1540: Minimum Configuration” on page 50.
E153	End adapter FCODE probe/evaluation	Go to “MAP 1540: Minimum Configuration” on page 50.
E154	Create PCI bridge node	Go to “MAP 1540: Minimum Configuration” on page 50.
E155	Probe PCI bridge secondary bus	Go to “MAP 1540: Minimum Configuration” on page 50.
E156	Create PCI Ethernet node	Go to “MAP 1540: Minimum Configuration” on page 50.
E15A	Create 64 bit host (primary) PCI controller node	Go to “MAP 1540: Minimum Configuration” on page 50.

Table 2. Firmware Checkpoints. (continued)

Checkpoint	Description	Action/ Possible Failing FRU
E15B	Transferring control to operating system (service mode boot)	See “Boot Problems/Concerns” on page 89.
E15C	Probe primary 64 bit PCI bus	Go to “MAP 1540: Minimum Configuration” on page 50.
E15D	Create host PCI controller node	Go to “MAP 1540: Minimum Configuration” on page 50.
E15E	Create MPIC node	Go to “MAP 1540: Minimum Configuration” on page 50.
E15F	Adapter VPD probe	Go to “MAP 1540: Minimum Configuration” on page 50.
E160	CPU node VPD creation	Go to “MAP 1540: Minimum Configuration” on page 50.
E161	Root node VPD creation	Go to “MAP 1540: Minimum Configuration” on page 50.
E162	Service processor node VPD creation	Go to “MAP 1540: Minimum Configuration” on page 50.
E164	Create PCI graphics node (P9)	Go to “MAP 1540: Minimum Configuration” on page 50.
E168	Create PCI graphics node (S3)	Go to “MAP 1540: Minimum Configuration” on page 50.
E171	Executing PCI-Delay function	Go to “MAP 1540: Minimum Configuration” on page 50.
E172	First pass PCI device probe	Go to “MAP 1540: Minimum Configuration” on page 50.
E174	Establish host connection	Refer to “Boot Problems/Concerns” on page 89 for general considerations.
E175	BootP request	Refer to “Boot Problems/Concerns” on page 89 for general considerations. 1. Turn off then on, and retry the boot operation. 2. Verify the network connection (network could be down). 3. Have network administrator verify the server configuration for this client.
E176	TFTP file transfer	Refer to “Boot Problems/Concerns” on page 89 for general considerations. 1. Turn off then on, and retry the boot operation. 2. Verify the network connection (network could be down). 3. Have network administrator verify the server configuration for this client.

Table 2. Firmware Checkpoints. (continued)

Checkpoint	Description	Action/ Possible Failing FRU
E177	Transfer failure due to TFTP error condition	Refer to “Boot Problems/Concerns” on page 89 for general considerations. 1. Turn off then on, and retry the boot operation. 2. Verify the network connection (network could be down). 3. Have network administrator verify the server configuration for this client.
E178	Create PCI token ring node	Go to “MAP 1540: Minimum Configuration” on page 50.
E17B	Processor frequency measurement	1. Replace battery, restore NVRAM data (passwords, startup data) 2. Replace I/O board. (See note on page 93).
E180	Service processor command setup	Go to “MAP 1540: Minimum Configuration” on page 50.
E183	Service processor post	Go to “MAP 1540: Minimum Configuration” on page 50.
E190	Create ISA node	Go to “MAP 1540: Minimum Configuration” on page 50.
E193	Initialize Super I/O.	Go to “MAP 1540: Minimum Configuration” on page 50.
E196	Probe ISA bus.	Go to “MAP 1540: Minimum Configuration” on page 50.
E19B	Create service processor node.	Go to “MAP 1540: Minimum Configuration” on page 50.
E19C	Create tablet node.	Go to “MAP 1540: Minimum Configuration” on page 50.
E19D	Create NVRAM node.	Go to “MAP 1540: Minimum Configuration” on page 50.
E19E	Real time clock (RTC) creation and initialization.	Refer to error code 28030xxx in “Firmware/POST Error Codes” on page 94.
E19F	Create EEPROM node.	Go to “MAP 1540: Minimum Configuration” on page 50.
E1AD	See description of checkpoint E1DE.	Go to “MAP 1540: Minimum Configuration” on page 50.
E1B0	Create lpt node.	1. I/O board. (See note on page 93.) 2. Go to “MAP 1540: Minimum Configuration” on page 50.
E1B1	Create serial node.	Go to “MAP 1540: Minimum Configuration” on page 50.

Table 2. Firmware Checkpoints. (continued)

Checkpoint	Description	Action/ Possible Failing FRU
E1B2	Create audio node.	1. I/O board (See note on page 93.) 2. Go to “MAP 1540: Minimum Configuration” on page 50.
E1B3	Create 8042 node.	1. I/O board (See note on page 93.) 2. Go to “MAP 1540: Minimum Configuration” on page 50.
E1B6	Probe for (ISA) keyboard.	1. I/O board (See note on page 93.) 2. Go to “MAP 1540: Minimum Configuration” on page 50.
E1BA	Enable L2 cache.	Go to “MAP 1540: Minimum Configuration” on page 50.
E1BB	Set cache parms for burst.	Go to “MAP 1540: Minimum Configuration” on page 50.
E1BC	Set cache parms for 512 KB.	Go to “MAP 1540: Minimum Configuration” on page 50.
E1BD	Probe for (ISA) mouse.	1. I/O board (See note on page 93.) 2. Go to “MAP 1540: Minimum Configuration” on page 50.
E1BE	Create operator panel node.	Go to “MAP 1540: Minimum Configuration” on page 50.
E1BF	Create pwr-mgmt node.	Go to “MAP 1540: Minimum Configuration” on page 50.
E1C0	Create ISA Ethernet node	Go to “MAP 1540: Minimum Configuration” on page 50.
E1C5	Create ISA interrupt controller (pic) node.	1. I/O board (See note on page 93.) 2. Go to “MAP 1540: Minimum Configuration” on page 50.
E1C6	Create DMA node.	1. I/O board (See notes on page 93.) 2. Go to “MAP 1540: Minimum Configuration” on page 50.
E1D0	Create PCI SCSI node.	Go to “MAP 1540: Minimum Configuration” on page 50.
E1D3	Create SCSI block device node (SD).	Go to “MAP 1540: Minimum Configuration” on page 50.
E1D4	Create SCSI byte device node (ST).	Go to “MAP 1540: Minimum Configuration” on page 50.
E1DB	Create floppy controller (FDC) node.	1. I/O board (See notes on page 93.) 2. Go to “MAP 1540: Minimum Configuration” on page 50.

Table 2. Firmware Checkpoints. (continued)

Checkpoint	Description	Action/ Possible Failing FRU
E1DC	Dynamic console selection.	If a console is attached but nothing is displayed on it, follow the steps associated with ″All display problems″ in the Entry MAP tables. If selection screen(s) can be seen on the terminals and the appropriate key on the input device associated with the desired display or terminal is pressed within 60 seconds, but there is no response to the keystroke: 1. If selecting the console with a keyboard attached to the system, replace the keyboard. If replacing the keyboard does not fix the problem, replace the I/O board. (See notes on page 93.) 2. If selecting the console with an ASCII terminal, suspect the ASCII terminal. Use the problem determination procedures for the terminal. Replace the I/O board if these procedures do not reveal a problem. Note: Terminal settings should be set to: • 9600 Baud • No Parity • 8 Data bits • 1 Stop bit
E1DD	Early processor exception	1. I/O board (See notes on page 93.) 2. Go to “MAP 1540: Minimum Configuration” on page 50.
E1DE	Alternating pattern of E1DE and E1AD is used to indicate a default catch condition before the firmware ″checkpoint″ word is available.	1. I/O board (See note on page 93.) 2. Go to “MAP 1540: Minimum Configuration” on page 50.
E1DF	Create diskette drive (disk) node	Go to “MAP 1540: Minimum Configuration” on page 50.
E1E0	Program flash	Go to “MAP 1540: Minimum Configuration” on page 50.
E1E1	Flash update complete	Go to “MAP 1540: Minimum Configuration” on page 50.
E1E2	Initialize System I/O	Go to “MAP 1540: Minimum Configuration” on page 50.
E1E3	PReP boot image initialization.	Go to “MAP 1540: Minimum Configuration” on page 50.

Table 2. Firmware Checkpoints. (continued)

Checkpoint	Description	Action/ Possible Failing FRU
E1E4	Initialize Super I/O with default values.	Go to “MAP 1540: Minimum Configuration” on page 50.
E1E5	XCOFF boot image initialization.	Go to “MAP 1540: Minimum Configuration” on page 50.
E1E6	Set up early memory allocation heap.	Go to “MAP 1540: Minimum Configuration” on page 50.
E1E7	PE boot image initialization.	Go to “MAP 1540: Minimum Configuration” on page 50.
E1E8	Initialize primary diskette drive (polled mode).	Go to “MAP 1540: Minimum Configuration” on page 50.
E1E9	ELF boot image initialization.	Go to “MAP 1540: Minimum Configuration” on page 50.
E1EA	Firmware flash corrupted, load from diskette.	1. Ensure that the diskette installed contains recovery image appropriate for this system unit. The System Management Services recovery procedure for the flash EEPROM should be executed. See “Firmware Update” on page 207. 2. If the diskette is installed with the correct recovery image, then suspect: • Diskette • Diskette drive • Diskette cable • I/O board (See notes on page 93.) 3. Go to “MAP 1540: Minimum Configuration” on page 50.

Table 2. Firmware Checkpoints. (continued)

Checkpoint	Description	Action/ Possible Failing FRU
E1EB	Verify flash EEPROM recovery image.	1. Ensure that the diskette installed contains recovery image appropriate for this system unit. The System Management Services recovery procedure for the flash EEPROM should be executed. See "Firmware Update" on page 207. 2. If the diskette is installed with the correct recovery image, then suspect: • Diskette drive • Diskette cable • I/O board (See notes on page 93.) 3. Go to "MAP 1540: Minimum Configuration" on page 50.
E1EC	Get recovery image entry point	Go to "MAP 1540: Minimum Configuration" on page 50.
E1ED	Invalidate instruction cache	Go to "MAP 1540: Minimum Configuration" on page 50.
E1EE	Jump to composite image	Go to "MAP 1540: Minimum Configuration" on page 50.
E1EF	Erase flash	Go to "MAP 1540: Minimum Configuration" on page 50.
E1F0	Start O.B.E.	Go to "MAP 1540: Minimum Configuration" on page 50.
E1F1	Begin self-test sequence on boot device(s)	Go to "MAP 1540: Minimum Configuration" on page 50.
E1F2	Power-on password prompt.	Prompt should be visible on the system console. If a console is attached but nothing is displayed on it, go to the "Quick Entry MAP" on page 27 with the symptom ″All display problems.″
E1F3	Privileged-access password prompt.	Prompt should be visible on the system console. If a console is attached but nothing is displayed on it, go to the "Quick Entry MAP" on page 27 with the symptom ″All display problems.″
E1F5	Build boot device list.	Go to "MAP 1540: Minimum Configuration" on page 50.

Table 2. Firmware Checkpoints. (continued)

Checkpoint	Description	Action/ Possible Failing FRU
E1F6	Determine boot device sequence.	Go to “MAP 1540: Minimum Configuration” on page 50.
E1F7	No boot image located.	Modify the boot sequence (also known as boot list) to include devices that are known to contain a copy of the operating system. This can be accomplished by using the system management services menus. For example, select a hard disk known to have a copy of the operating system as the first and only device in the boot sequence (boot list) and attempt to boot again.
E1FB	Scan SCSI bus for attached devices.	Go to “MAP 1540: Minimum Configuration” on page 50.
E1FD	Default catch	The operator panel will alternate between the code E1FD and another Exxx code, where Exxx is the point at which the error occurred. If the Exxx is not listed in this table, go to “MAP 1540: Minimum Configuration” on page 50.
E201	Setup PHB BARC addresses.	1. Replace the I/O board (See note on page 93.) 2. Go to “MAP 1540: Minimum Configuration” on page 50.
E202	Initialize PHB registers and PHB’s PCI configuration registers.	1. Replace the I/O board (See note on page 93.) 2. Go to “MAP 1540: Minimum Configuration” on page 50.
E203	Look for PCI to ISA bridge.	1. Replace the I/O board (See note on page 93.) 2. Go to “MAP 1540: Minimum Configuration” on page 50.
E204	Setup ISA bridge, PCI config. registers and initialize	1. Replace the I/O board (See note on page 93.) 2. Go to “MAP 1540: Minimum Configuration” on page 50.
E206	Check for 50 MHz device on PCI bus in slots 1P and 2P.	1. Replace the I/O board (See note on page 93.) 2. I/O adapter in PCI slot 1P or 2P. 3. Go to “MAP 1540: Minimum Configuration” on page 50.

Table 2. Firmware Checkpoints. (continued)

Checkpoint	Description	Action/ Possible Failing FRU
E207	Setup data gather mode and 64/32-bit mode on PCG.	1. Replace the I/O board (See note on page 93.) 2. Go to “MAP 1540: Minimum Configuration” on page 50.
E208	Assign bus number on PCG.	1. Replace the I/O board (See note on page 93.) 2. Go to “MAP 1540: Minimum Configuration” on page 50.
E209	Assign PCI I/O addresses on PCI.	1. Replace the I/O board (See note on page 93.) 2. Go to “MAP 1540: Minimum Configuration” on page 50.
E20A	Assign PCI I/O addresses on PCG	1. Replace the I/O board. (See note on page 93.) 2. Go to “MAP 1540: Minimum Configuration” on page 50.
E20B	Check MCERs stuck at fault.	1. Replace the system board. 2. If the problem persists, go to “MAP 1540: Minimum Configuration” on page 50.
E20C	Testing L2 cache.	1. Replace the processor card. 2. Go to “MAP 1540: Minimum Configuration” on page 50.
E210	Processors L1 data cache array test fails. System hangs.	1. Replace I/O board. 2. Go to “MAP 1540: Minimum Configuration” on page 50.
E211	IPL ROS CRC checking.	1. Replace the I/O board. (See note on page 93.) 2. Go to “MAP 1540: Minimum Configuration” on page 50.
E212	Processor POST.	1. Replace the processor card. 2. Go to “MAP 1540: Minimum Configuration” on page 50.
E213	Initial memory configuration.	Go to “MAP 1240: Memory Problem Resolution” on page 39.
E214, E218	Memory test.	Go to “MAP 1240: Memory Problem Resolution” on page 39.
E216	Copy ROS into RAM. Setup translation and C environment.	1. Replace the memory card . 2. Go to “MAP 1540: Minimum Configuration” on page 50.

Table 2. Firmware Checkpoints. (continued)

Checkpoint	Description	Action/ Possible Failing FRU
E21A	System has good memory	Go to “MAP 1540: Minimum Configuration” on page 50.
E220	Final memory configuration.	Go to “MAP 1240: Memory Problem Resolution” on page 39.
E240	Setup Winbond ISA bridge.	1. Replace I/O board. (See notes on page 93.) 2. Go to “MAP 1540: Minimum Configuration” on page 50.
E241	Reset PCI Bus.	1. Replace I/O board. (See notes on page 93.) 2. Go to “MAP 1540: Minimum Configuration” on page 50.
E242	Initialize ISA DMA channel.	1. Replace I/O board. (See notes on page 93.) 2. Go to “MAP 1540: Minimum Configuration” on page 50.
E243	Setup Grackle configuration registers.	1. Replace I/O board. (See note on page 93.) 2. Go to “MAP 1540: Minimum Configuration” on page 50.
E244	Enable system speaker and send a beep.	1. Replace I/O board. (See note on page 93.) 2. Go to “MAP 1540: Minimum Configuration” on page 50..
E246	System firmware corrupted, take recovery path.	1. Replace I/O board. (See note on page 93.) 2. Go to “MAP 1540: Minimum Configuration” on page 50..
E247	Capture DIMM SPDs into NVRAM.	1. Replace I/O board. (See note on page 93.) 2. Go to “MAP 1540: Minimum Configuration” on page 50.
E249	Enter recover path’s main code.	1. Replace I/O board. (See note on page 93.) 2. Go to “MAP 1540: Minimum Configuration” on page 50.
E24C	L2 cache array test fails. System hangs.	1. Replace I/O board. (See note on page 93.) 2. Go to “MAP 1540: Minimum Configuration” on page 50.

Table 2. Firmware Checkpoints. (continued)

Checkpoint	Description	Action/ Possible Failing FRU
E24D	L2 cache array test fails. System hangs.	1. Replace I/O board. (See note on page 93.) 2. Go to “MAP 1540: Minimum Configuration” on page 50.
E297	Start firmware softload path execution.	Go to “MAP 1540: Minimum Configuration” on page 50.
E298	Start firmware recovery path execution.	Go to “MAP 1540: Minimum Configuration” on page 50.
E299	Start C code execution.	Go to “MAP 1540: Minimum Configuration” on page 50.
E3xx	Memory test	See “MAP 1240: Memory Problem Resolution” on page 39.
E440	Validate NVRAM, initialize partitions as needed.	1. Verify that the system and service processor firmware levels are at the current release levels; update as necessary. 2. Replace the I/O board. (See note on page 93.) 3. Go to “MAP 1540: Minimum Configuration” on page 50.
E441	Generate / options node NVRAM configuration variable properties.	1. Verify that the system and service processor firmware levels are at the current release levels, update as necessary. 2. Replace the I/O board. (See note on page 93.) 3. Go to “MAP 1540: Minimum Configuration” on page 50.
E442	Validate NVRAM partitions.	1. Verify that the system and service processor firmware levels are at the current release levels; update as necessary. 2. Replace the I/O board. (See note on page 93.) 3. Go to “MAP 1540: Minimum Configuration” on page 50.
E443	Generate NVRAM configuration variable dictionary words.	1. Suspect a system firmware problem if this problem persists. Verify that the system firmware is at the current release level; update as necessary. 2. Go to “MAP 1540: Minimum Configuration” on page 50.
E600	SSA PCI adapter open firmware has run successfully.	1. Replace the adapter. 2. Go to “MAP 1540: Minimum Configuration” on page 50.

Table 2. Firmware Checkpoints. (continued)

Checkpoint	Description	Action/ Possible Failing FRU
E601	SSA PCI adapter BIST has been started but failed to complete after 4 secs.	1. Replace the adapter. 2. Go to “MAP 1540: Minimum Configuration” on page 50.
E602	SSA PCI adapter open firmware has started.	1. Replace the adapter. 2. Go to “MAP 1540: Minimum Configuration” on page 50.
E603	SSA PCI adapter BIST has completed with an error.	1. Replace the adapter. 2. Go to “MAP 1540: Minimum Configuration” on page 50.
E604	SSA PCI adapter BIST and subsequent POSTs have completed successfully	1. Replace the adapter. 2. Go to “MAP 1540: Minimum Configuration” on page 50.
E605	SSA PCI adapter BIST has completed successfully, but the subsequent POSTs have failed.	1. Replace the adapter. 2. Go to “MAP 1540: Minimum Configuration” on page 50.
E60E	SSA PCI adapter open firmware about to exit (no stack corruption).	1. Replace the adapter. 2. Go to “MAP 1540: Minimum Configuration” on page 50.
E60F	SSA PCI adapter open firmware has run unsuccessfully.	1. Replace the adapter. 2. Go to “MAP 1540: Minimum Configuration” on page 50.
E6FF	SSA PCI adapter open firmware about to exit (with stack corruption)	1. Replace the adapter. 2. Go to “MAP 1540: Minimum Configuration” on page 50.

Boot Problems/Concerns

Depending on the boot device, a checkpoint may be displayed on the operator panel for an extended period of time while the boot image is retrieved from the device. This is particularly true for tape and network boot attempts. If booting from CD-ROM or tape, watch for activity on the drive’s LED indicator. A blinking LED indicates that the loading of either the boot image or additional information required by the operating system being booted is still in progress. If the checkpoint is displayed for an extended period of time and the drive LED is not indicating any activity, there might be a problem loading the boot image from the device.

Note: For network boot attempts, if the system is not connected to an active network or if the target server is inaccessible (which can also result from incorrect IP parameters being supplied), the system will still attempt to boot. Because time-out durations are necessarily long to accommodate retries, the system may appear to be hung.

This procedure assumes that a CD-ROM drive is connected to internal SCSI connector J7 and a diagnostics CD-ROM is available.

Step 1

Restart the system and access the firmware SMS Main Menu. Select **Multiboot**.

1. Check if the intended boot device is correctly specified in the boot sequence.
2. If the intended boot device is not correctly identified in the boot sequence, add it to the boot sequence using the SMS menus, (if the intended boot device cannot be added to the boot sequence, go to "Step 3.")
3. Remove all removable media from devices in the boot list from which you do not want to boot.
4. If attempting to boot from the network, go to "Step 2."
5. If attempting to boot from a disk drive or CD-ROM, go to "Step 3."

Step 2

If you are attempting to boot from the network:

1. Verify that IP parameters are correct.
2. Attempt to ″ping″ the target server using the SMS Ping utility. If the ping is not successful, have the network administrator verify the server configuration for this client.
3. Check with the network administrator to ensure that the network is up.
4. Check the network cabling to the adapter.
5. Turn the power off, then on and retry the boot operation.

Step 3

Try to boot and run standalone diagnostics against the system, particularly against the intended boot device.

1. From the Task Selection Menu, select ″Display Configuration and Resource List.″ If the intended boot device is not listed, go to ″MAP 0290: Missing Resource Problem Resolution″ in the *RS/6000 and @server pSeries Diagnostics Information for Multiple Bus Systems*.
2. If an SRN, not an 8-digit error code, is reported, go to the *RS/6000 and @server pSeries Diagnostics Information for Multiple Bus Systems*.
3. If the diagnostics are successful, it may be necessary to perform an operating system-specific recovery process, or reinstall the operating system.
4. If you are unable to load standalone diagnostics, do the following:
   a. Verify correct SCSI bus termination.
   b. Check SCSI cabling.
   c. It is possible that another attached SCSI device is causing the problem. Do the following:
      1) Disconnect the signal and power cables from the disk drive cage backplane.
      2) Disconnect the disk drive(s) in the disk drive cage from the backplane.
      3) Disconnect the signal and power cables from any other SCSI devices attached to the SCSI adapter that the CD-ROM drive is attached to.
      4) Try to boot the standalone diagnostics again.

5) If you are still unable to load standalone diagnostics go to “Step 4.”
6) If standalone diagnostics load, one of the disconnected devices is causing the problem. Reconnect the devices one at a time and retry the boot operation until the problem recurs and replace the device that caused the problem. (If the problem appears to be one of the disk drives in the disk drive cage, be aware it could be either the disk drive or the backplane.) Go to "MAP 410: Repair Checkout" in the *RS/6000 and @server pSeries Diagnostics Information for Multiple Bus Systems*.

Step 4

It is possible that another installed adapter is causing the problem. Do the following:

1. Remove all installed adapters except the one the CD-ROM drive is attached to and the one used for the console.
2. Try to boot the standalone diagnostics again.
3. If you are unable to load standalone diagnostics, go to “Step 5.”
4. If standalone diagnostics load, reinstall adapters (and attached devices as applicable) one at a time and retry the boot operation until the problem recurs. Then replace the adapter or device that caused the problem. (The system board can also cause the device or adapter to fail.) Go to "MAP 410: Repair Checkout" in the *RS/6000 and @server pSeries Diagnostics Information for Multiple Bus Systems*.

Step 5

The CD-ROM drive, SCSI cable, SCSI adapter, graphics adapter, or the system board is most likely defective. A SCSI terminal attached to the serial port also can be used to determine if the graphics adapter is causing the problem. This is done by removing the graphics adapter, attaching an SCSI terminal to the serial port, and retrying standalone diagnostics. If the standalone diagnostics load, replace the graphics adapter.

1. Replace the CD-ROM drive.
2. Replace the SCSI cable.
3. If the CD-ROM drive is attached to a SCSI adapter rather than the integrated SCSI on the system board, replace the SCSI adapter.
4. Replace the system board.
5. If you replaced the indicated FRUs or performed an action and the problem is still not corrected, or the above descriptions did not address your particular situation, go to “MAP 1540: Minimum Configuration” on page 50.
6. Go to "MAP 410: Repair Checkout" in *RS/6000 and @server pSeries Diagnostics Information for Multiple Bus Systems*.

Chapter 5. Error Code to FRU Index

The Error Code to FRU Index lists error symptoms and possible causes. The most likely cause is listed first. Use this index to help you decide which FRUs to replace when you are servicing the system.

Considerations for Using this Chapter

If you replace FRUs or perform an action, and the problem is still not corrected, go to “MAP 1540: Minimum Configuration” on page 50, unless otherwise indicated in the tables.

If you replace FRUs and the problem is corrected, go to "MAP 410: Repair Checkout" in the *RS/6000 and @server pSeries Diagnostics Information for Multiple Bus Systems*.

Performing Slow Boot

To fully analyze all of the available information, perform the following steps before doing a hardware repair or replacement, especially if the error is related to the CPU or memory.

1. Record the 8-character error code (and location code if present) displayed in the operator panel, or that was reported by the customer.
2. Do a slow-mode boot in service mode. This can be specified using the System Power Control Menu on the service processor main menu. (A fast-mode boot skips much of the built-in diagnostic testing.) A slow-mode boot may yield a new 8-character error code on the operator panel and new errors in the service processor error log. If a new error code is reported, use it in subsequent steps to continue problem analysis.

General Considerations

If the codes in the following tables indicate a device that is present more than once in the system unit, a location code is needed to specify which device generated the error. Go to “Step 1020-4” on page 38 to display the System Management Services error log and obtain a location code. Location code descriptions can be found under “Location Codes” on page 9.

After you have obtained the location code, see Chapter 10, “Parts Information,” on page 271 for the part number.

Notes:

1. If more than eight digits are displayed in the operator panel, use only the first eight digits to find the error in the tables. The digits that display beyond the first eight digits are location codes that can assist you in diagnosing the problem. See “Location Codes” on page 9.
2. Licensed programs frequently rely on system information stored in the VPD module on the operator panel control assembly. If the MAPs indicate that the operator panel control assembly should be replaced, swap the VPD module from the old operator panel to the new one. If the existing VPD module must be replaced, call technical

support for recovery instructions. If recovery is not possible, notify the system owner that new keys for licensed programs may be required.

3. If a network adapter or the I/O board is replaced, the network administrator must be notified so that the client IP addresses used by the server can be changed. In addition, the operating system configuration of the network controller might need to be changed in order to enable system startup. Also check to ensure that any client or server that addresses this system is updated.
4. For service processor menus, see Chapter 7, “Using the Service Processor,” on page 149.

Firmware/POST Error Codes

Table 3. Firmware Error Codes.

Error Code	Description	Action / Possible Failing FRU
20A80000	Insufficient information to boot.	Verify the IP address.
20A80001	Client IP address is already in use by other network device.	Change IP address.
20A80002	Cannot get gateway IP address.	Go to table using code **E174** “Firmware Checkpoints” on page 75.
20A80003	Cannot get server hardware address.	Go to table using code **E174** “Firmware Checkpoints” on page 75.
20A80004	Bootp failed.	1. Refer to “Boot Problems/Concerns” on page 89 for general considerations. 2. Turn off then on, and retry the boot operation. 3. Verify boot list by using the firmware SMS multiboot menus. 4. Verify the network connection (network could be down). 5. Have network administrator verify the server configuration for this client.
20A80005	File transmission (FTP) failed.	Check network connection, try again.
20A80006	Image too big. Ran out of available firmware memory resources loading boot image.	Verify boot server configuration.
20D0000F	Self-test failed on device, no error/location code information available.	Check the System Management Services error log (described in “Step 1020-4” on page 38) for this error code. The location code (if present) in the error log entry should identify the location of the failing device.
20D00010	Self-test failed on device, cannot locate package.	Contact your service support representative for assistance.
20D00011	Instantiate RTAS failed.	Contact your service support representative for assistance.

Table 3. Firmware Error Codes. (continued)

Error Code	Description	Action / Possible Failing FRU
20E00000	Power-on password entry error.	The password has been entered incorrectly. Retry installing the password.
20E00001	Privileged-access password entry error.	The password has been entered incorrectly. Retry installing the password.
20E00002	Privileged-access password jumper not enabled.	The privileged-access password jumper is not in the correct position for password initial entry. Consult the system's user's guide for jumper location and position.
20E00003	Power-on password must be set for unattended mode.	Unattended mode requires the setting of the power-on password before it is enabled.
20E00004	Battery drained or needs replacement.	1. Replace battery. 2. Replace I/O board. (See note on page 93.)
20E00005	EEPROM locked	1. Turn off, turn on system unit. 2. Replace I/O board. (See note on page 93.)
20E00008	CMOS reinitialized due to corruption.	1. Replace battery, restore NVRAM data (passwords, startup data). 2. Replace I/O board. (See note on page 93.)
20E00009	Invalid password entered - system locked.	The password has been entered incorrectly 3 times. Turn off, then turn on the system unit, then enter the password correctly.
20E0000C	Failed to open RTC device tree node	1. Turn off, turn on system unit. 2. Replace I/O board. (See note on page 93.)
20E00017	Cold boot needed for password entry.	Turn off, turn on system unit.
20EE0003	IP parameter requires 3 dots ″.″	Enter valid IP parameter. Example: 000.000.000.000
20EE0004	Invalid IP parameter.	Enter valid (numeric) IP parameter. Example: 000.000.000.000
20EE0005	Invalid IP parameter (>255)	Enter valid (numeric) IP parameter in the range of 0 to 255. Example: 255.192.002.000

Table 3. Firmware Error Codes. (continued)

Error Code	Description	Action / Possible Failing FRU
20EE0006	No SCSI controllers present	The I/O board should always have (at least) 2 integrated PCI SCSI controllers; replace the I/O board. (See note on page 93.)
20EE0007	Keyboard not found	1. Plug in keyboard. 2. Replace I/O board. (See note on page 93.)
20EE0008	No configurable adapters found in the system.	This warning occurs when the selected SMS function cannot locate any devices/adapters supported by the function. If a supported device is installed: 1. Replace the device or adapter. 2. Replace I/O board. (See note on page 93.)
20EE0009	Unable to communicate with the service processor.	1. Replace I/O board. (See note on page93 2. Replace system board. 3. Go to ″MAP 1540: Minimum Configuration″ on page 71.

Table 3. Firmware Error Codes. (continued)

Error Code	Description	Action / Possible Failing FRU
20EE000A	Pointer to the operating system found in nonvolatile storage.	Values normally found in nonvolatile storage that point to the location of an operating system were not found. This can happen for either of two reasons: 1. Your installed operating system does not support storing the values. 2. Some event occurred that caused the system to lose nonvolatile storage information (drainage or replacement of the battery). If you are running AIX, this information can be reconstructed by running the **bootlist** command, specifying the device that the operating system is installed on. Refer to your AIX documentation for the exact syntax and usage of the **bootlist** command. To boot the operating system so that the above-mentioned values can be reconstructed, power down the system and power it back up again. This should cause the system to look for the operating system in the devices contained in the custom boot list or in the default boot list, depending on the condition of the system. If this is not successful, use the system management services menus to modify the boot sequence (also known as boot list) to include devices that are known to contain a copy of the operating system. For example, select a hard disk known to have a copy of the operating system as the first and only device in the boot sequence (boot list) and attempt to boot again.
20EE000B	The system was not able to find an operating system on the boot list that was attempted.	Go to “Boot Problems/Concerns” on page 89

Table 3. Firmware Error Codes. (continued)

Error Code	Description	Action / Possible Failing FRU
21A00xxx	SCSI DASD device errors	**Notes:** 1. Before replacing any system components: a. Ensure that the controller and each device on the SCSI bus is assigned a unique SCSI ID. b. Ensure SCSI bus is properly terminated. c. Ensure SCSI signal and power cables are securely connected and not damaged. 2. The location code information is required to identify the ID of SCSI device failures as well as to indicate the location of the controller to which the device is attached. 3. Check below for the xxx value, the xxx can stand for anything like 001, 002, 003 and so on. Ensure that the suspected SCSI device is checked out completely.
21A00001	Test unit ready failed - hardware error.	Refer to the notes in error code 21A00xxx. 1. Replace the SCSI device. 2. Replace the SCSI cable. 3. Replace the SCSI controller.
21A00002	Test unit ready failed - sense data available.	Refer to the notes in error code 21A00xxx. 1. Replace the media (removable media devices). 2. Replace the SCSI device.
21A00003	Send diagnostic failed.	1. Refer to the notes in error code 21A00xxx. 2. Replace the SCSI device.
21A00004	Send diagnostic failed - DevOfl command.	1. Refer to the notes in error code 21A00xxx. 2. Replace the SCSI device.
21E00xxx	SCSI tape	Refer to 21A00xxx for a description and repair action for the xxx value.
21ED0xxx	SCSI changer.	Refer to 21A00xxx for a description and repair action for the xxx value.
21EE0xxx	Other SCSI device type.	Refer to 21A00xxx for a description and repair action for the xxx value.
21F00xxx	SCSI CD-ROM.	Refer to 21A00xxx for a description and repair action for the xxx value.

Table 3. Firmware Error Codes. (continued)

Error Code	Description	Action / Possible Failing FRU
21F20xxx	SCSI read/write optical.	Refer to 21A00xxx for a description and repair action for the xxx value.
22000001	Internal wrap test failed.	Replace adapter.
22001001	Internal wrap test failed.	Replace adapter.
22002001	Adapter failed to complete hardware initialization.	Replace adapter.
22010001	Adapter failed to complete hardware initialization.	Replace adapter.
22011001	Adapter failed to complete hardware initialization.	Replace adapter.
25000000	Memory controller failed.	Replace the system board.
25010xxx	Flash update problem	
25010000	No diskette in drive.	Insert diskette containing firmware image.
25010001	Diskette seek error.	1. Retry function. 2. Replace diskette drive. 3. Replace diskette cable. 4. Replace I/O board. (See note on page 93.)
25010002	Diskette in drive does not contain an *.IMG file.	Insert diskette with firmware update file.
25010003	Cannot open OPENPROM package.	Replace I/O board. (See note on page 93.)
25010004	Cannot find OPENPROM node.	Replace I/O board. (See note on page 93.)
25010006	System id does not match image system id.	Make sure correct firmware update diskette is being used with this system.
25010007	Image has bad CRC.	Replace firmware update diskette.
25010008	Flash is write-protected, update cancelled.	1. Turn off, turn on system unit and retry. 2. Replace I/O board. (See note on page 93.)
25010009	Flash module is unsupported or not recognized.	Make sure correct firmware update diskette is being used with this system.
2501000A	Flash write-protected.	1. Turn off, turn on system unit, retry. 2. Replace I/O board. (See note on page 93.)
2501000C	Failed write to flash memory.	1. Turn off, turn on system unit, retry. 2. Replace I/O board. (See note on page 93.)

Table 3. Firmware Error Codes. (continued)

Error Code	Description	Action / Possible Failing FRU
25A0xxx0	L2 cache controller problem.	1. Replace the processor card. 2. Replace the system board. See error code 2B2xxx22 for xxx definitions.
25A0xxx1	L2 cache controller problem.	1. Replace the processor card. 2. Replace the system board. See error code 2B2xxx22 for xxx definitions.
25A1xxxy	L2 SRAM failure	Replace the processor card. See error code 2B2xxx22 for xxx definitions.
25A80xxx	NVRAM problems	1. Errors reported against NVRAM can be caused by low battery voltage and (more rarely) power outages that occur during normal system usage. With the exception of the 25A80000 error, these errors are warnings that the NVRAM data content had to be reestablished and do not require any FRU replacement unless the error is persistent. When one of these errors occurs, any system customization (for example boot device list) information has been lost; the system may need to be reconfigured. 2. If the error is persistent, replace the battery. 3. If the error is persistent after battery replacement, or the error code is 25A80000, replace the I/O board. (See note on page 93.)
25A80000	Initialization failed, device test failed.	Refer to Action under error code 25A80xxx.
25A80001	Init-nvram invoked, all of NVRAM initialized.	Refer to Action under error code 25A80xxx.
25A80002	Init-nvram invoked, some data partitions may have been preserved.	Refer to Action under error code 25A80xxx.
25A80011	Data corruption detected, all of NVRAM initialized.	Refer to Action under error code 25A80xxx.
25A80012	Data corruption detected; some data partitions may have been preserved.	Refer to Action under error code 25A80xxx.

Table 3. Firmware Error Codes. (continued)

Error Code	Description	Action / Possible Failing FRU
25A80100	NVRAM data validation check failed.	Turn off, turn on system unit and retry the operation before replacing any system component. Refer to Action under error code 25A80xxx.
25A80201	Unable to expand target partition while saving configuration variable.	Refer to Action under error code 25A80xxx.
25A80202	Unable to expand target partition while writing error log entry.	Refer to Action under error code 25A80xxx.
25A80203	Unable to expand target partition while writing VPD data.	Refer to Action under error code 25A80xxx.
25A80210	Setenv/$Setenv parameter error - name contains a null character.	Refer to Action under error code 25A80xxx.
25A80211	Setenv/$Setenv parameter error - value contains a null character.	Refer to Action under error code 25A80xxx.

Table 3. Firmware Error Codes. (continued)

Error Code	Description	Action / Possible Failing FRU
25A80998	NVRAMRC script evaluation error - command line execution error	Execution of a command line within the NVRAM configuration variable ″NVRAMRC″ (script) resulted in a ″throw″ being executed. This script can be modified by the system firmware SMS utilities, the operating system, PCI adapter ROM code or utility, or an operator (via the open firmware script editing command ″nvedit″). It may not be possible to resolve the problem without a detailed analysis of the NVRAM script, current system configuration, and device tree contents. 1. The problem can be caused by a SCSI adapter, whose SCSI bus ID has been changed from the default setting, no longer appearing in the system. This can be caused either by removing adapter, or problem with a SCSI adapter. • Select the SCSI ID utility from the SMS menu(s). a. Verify the list of SCSI controllers/adapters. If the list is not correct, suspect a problem with he adapter(s) installed but not listed. b. Select the option to SAVE the configuration information. c. Restart the system. • If the problem persists, boot the operating system and verify the SCSI bus IDs of any installed/available SCSI controllers (change as necessary), and restart the system. 2. Contact your service support representative for further assistance.
25A80999	NVRAMRC script evaluation error - stack unbalanced on completion.	This is a firmware debug environment error. There is no user action or FRU replacement.

Table 3. Firmware Error Codes. (continued)

Error Code	Description	Action / Possible Failing FRU
Memory Errors Use the location code obtained from the SMS error log utility (described in "Step 1020-4" on page 38) to identify which memory module (or memory module pair) the error is reported against. Memory error codes are in the form **25Byyxxx** where **yy** indicates memory module PD-bits and **xxx** indicates the last 3 digits of the error code. See "Memory Problem Determination Bits" on page 142 for information on how to interpret PD-bits.		
25B00001	No memory DIMMs detected	1. Reseat any installed memory card(s) and retry 2. Reseat any installed memory modules on the installed memory cards and retry. 3. Replace memory card(s). 4. Replace system board.
25B00002	Multiple memory modules failed memory test.	1. Reseat any installed memory card(s) and retry 2. Reseat any installed memory modules on the installed memory cards and retry. 3. Replace memory card(s). 4. Replace system board.
25Cyy001	Memory module is not supported.	Replace unsupported memory module. **Note:** A memory module must be replaced with a supported type of memory module. If an unsupported memory module is replaced by the same unsupported type, the error remains. There may be two memory module-related memory errors reported to indicate a memory module pair. One of the two indicated memory modules may be good. When replacing memory, replace one memory module at a time, not both. See "Memory Problem Determination Bits" on page 142 for definition of ″yy″.

Table 3. Firmware Error Codes. (continued)

Error Code	Description	Action / Possible Failing FRU
25Cyy002	Memory module fails memory test.	1. Access the following service processor menus: • Privileged User Menu • System Information Menu • Memory Configuration / Deconfiguration Menu 2. If the Memory Configuration / Deconfiguration Menu Indicates: • Fewer than four memory modules deconfigured, go to step 3. • Four memory modules are deconfigured, go to step 4. • More than four memory modules are deconfigured, go to step 5. 3. Replace the deconfigured memory modules. 4. Replace the memory card. **Note:** Before replacing the system board, perform steps 3 and 4. 5. Replace the system board. See "Memory Problem Determination Bits" on page 142 for definition of ″yy″.
25Cyy003	PD bits are mismatched or missing one memory module.	1. Make sure both memory modules in the pair are the same type. 2. Replace system board. See "Memory Problem Determination Bits" on page 142 for definition of ″yy″.
25Cyy004	Memory modules are disabled.	Remove this unused memory module. See "Memory Problem Determination Bits" on page 142 for definition of ″yy″.
25Cyy005	Memory module failed address test.	1. Replace memory module. 2. Replace memory card. 3. Replace system board. 4. Replace processor card. See "Memory Problem Determination Bits" on page 142 for definition of ″yy″.

Table 3. Firmware Error Codes. (continued)

Error Code	Description	Action / Possible Failing FRU
25Cyy006	Memory module failed inter-extent test.	1. Replace system board. 2. Replace processor card. See “Memory Problem Determination Bits” on page 142 for definition of ″yy″.
25Cyy007	Memory module failed extent access test.	1. Replace system board. 2. Replace processor card. See “Memory Problem Determination Bits” on page 142 for definition of ″yy″.
25Cyy008	Memory module has been deconfigured.	If DIMMs are 512 MB (yy = 28 or 2A), verify proper system board is installed before replacing parts: • If system board is ASM/FRU 41L5477/08L0988, then it does not support use of 512 MB DIMMs. • If system board is ASM/FRU 09P2054/09P2053, continue through action plan below: 1. Replace memory module. 2. Replace system board. See “Memory Problem Determination Bits” on page 142 for definition of ″yy″.
26020001	Invalid PCI adapter vendor ID.	1. Move adapter to another slot (behind a different PCI bridge). 2. Check for available firmware updates for adapter. Apply update if available. 3. Run AIX diagnostics on adapter. Replace if indicated. 4. Replace adapter. 5. Check for system firmware updates. Apply if update available. 6. Replace power supply. 7. Replace I/O board. (See note on page 93.)

Table 3. Firmware Error Codes. (continued)

Error Code	Description	Action / Possible Failing FRU
26020002	Invalid PCI adapter device ID.	1. Move adapter to another slot (behind a different PCI bridge). 2. Check for available firmware updates for adapter. Apply update if available. 3. Run AIX diagnostics on adapter. Replace if indicated. 4. Replace adapter. 5. Check for system firmware updates. Apply if update available. 6. Replace power supply. 7. Replace I/O board. (See note on page 93.)
26020003	Invalid or unrecognized PCI adapter class code.	1. Move adapter to another slot (behind a different PCI bridge). 2. Check for available firmware updates for adapter. Apply update if available. 3. Run AIX diagnostics on adapter. Replace if indicated. 4. Replace adapter. 5. Check for system firmware updates. Apply if update available. 6. Replace power supply. 7. Replace I/O board. (See note on page 93.)
26020007	Failed to allocate bus resources to PCI adapter.	1. Move adapter to another slot (behind a different PCI bridge). 2. Check for available firmware updates for adapter. Apply update if available. 3. Run AIX diagnostics on adapter. Replace if indicated. 4. Replace adapter. 5. Check for system firmware updates. Apply if update available. 6. Replace power supply. 7. Replace I/O board. (See note on page 93.)

Table 3. Firmware Error Codes. (continued)

Error Code	Description	Action / Possible Failing FRU
26800Cxx	Machine check occurred.	If the location code shown on the operator panel identifies a card slot: 1. Replace the adapter in the slot identified. 2. Replace the I/O board (See note on page 93.) If the location code shown does not identify a card slot, or if there is no location code, replace the I/O board. (See note on page 93.)
26800Dxx	Machine check occurred, unable to isolate to single device	″xx″ indicates the PCI bus number with the error 1. Attempt to reboot the system in service mode; this preserves the AIX error log. If the reboot is successful, run diagnostics in problem determination mode to determine the cause of failure. Otherwise continue. 2. Refer to the ″Bus SRN to FRU Reference Table″ page 123, using PCI Bus ″xx″ for isolation of the failing device.
28030xxx	RTC errors	1. Errors reported against the real time clock (RTC) can be caused by low battery voltage and (more rarely) power outages that occur during normal system usage. These errors are warnings that the RTC data content had to be re-established and do not require any FRU replacement unless the error is persistent. When one of these errors occurs, the power-on password and time and date information has been lost. • To set/restore a power-on password, use the SMS utility. • To set/restore the time and date, use the operating system facility. 2. If the error is persistent, replace the battery. 3. If the error is persistent after battery replacement, replace the I/O board. (See note on page 93.)
28030001	RTC initialization required-RTC not updating, corrected.	Refer to Action under error code 28030xxx.

Table 3. Firmware Error Codes. (continued)

Error Code	Description	Action / Possible Failing FRU
28030002	Bad time/date values	1. Set the time and date. 2. Refer to Action under error code 28030xxx.
28030003	RTC initialization required-RTC not updating, not corrected.	Replace I/O board. (See note on page 93.
28030004	RTC operating mode parameters changed (such as data format)	1. Set/restore the time and date 2. Refer to RTC problem resolution above if problem persists.
28030005	RTC battery error	1. Replace the battery 2. Refer to RTC problem resolution above if problem persists. Password, time, and date must be reset.
28030006	Processor frequency measurement error	1. Verify that the current level of the system firmware is installed. 2. Replace the processor card 3. Replace I/O planar Replacing the battery does not correct this error condition.
29000002	Keyboard/mouse controller failed self-test.	Replace the I/O board. (See note on page 93.)
29A00003	Keyboard not present/detected.	1. Keyboard 2. Replace the I/O board. (See note on page 93.)
29A00004	Keyboard stuck key test failed.	1. Keyboard 2. Replace the I/O board. (See note on page 93.)
29B00004	Mouse not present/detected.	1. Mouse 2. Replace the I/O board. (See note on page 93.)
2B2xxx11	Processor is manually disabled.	Use service processor menus to re-enable the processor and reboot the system. See error code 2B2xxx22 for xxx definitions.

Table 3. Firmware Error Codes. (continued)

Error Code	Description	Action / Possible Failing FRU
2B2xxx22	Processor disabled.	Processor card, where xxx indicates the processor type as follows: **651** 200 MHz processor card with 1 MB of L2 cache. **654** 200 MHz processor card with 4 MB of L2 cache. **754** 375 MHz 1- way processor card with 4 MB of L2 cache. **764** 375 MHz 2- way processor card with 4 MB of L2 cache. **768** 375 MHz 2- way processor card with 8 MB of L2 cache. **7A8** 450 MHz 2- way processor card with 8 MB of L2 cache.
2B2xxx31	Processor failed.	Processor card. See error code 2B2xxx22 for xxx definitions.
2B2xxx42	Unsupported processor type.	Processor card. See error code 2B2xxx22 for xxx definitions.
2BA00xxx	Service processor	
2BA00000	Service processor POST failure.	1. Unplug the system power cable and wait until the system power indicator remains off and the operator panel is blank. 2. Plug the system power cable back in and retry the operation. 3. Replace the I/O board. (See note on page 93.)
2BA00012	Service processor reports self-test failure.	1. Unplug the system power cable and wait until the system power indicator remains off and the operator panel is blank. 2. Plug the system power cable back in and retry the operation. 3. Replace the I/O board. (See note on page 93.)
2BA00013	Service processor reports bad NVRAM CRC.	1. If problem persists, replace battery. 2. Replace the I/O board. (See note on page 93.)
2BA00014	Service processor reports bad service processor firmware.	Use service processor firmware diskette to reprogram firmware.
2BA00017	Service processor reports bad or low battery.	1. Replace the battery. 2. Replace the I/O board. (See note on page 93.)

Table 3. Firmware Error Codes. (continued)

Error Code	Description	Action / Possible Failing FRU
2BA00018	EPOW test failure.	Replace the I/O board. (See note on page 93.)
2BA00019	IRQ13 test failure.	Replace the I/O board. (See note on page 93.)
2BA00024	Service processor reports bad power controller firmware.	Use the system firmware diskette to reprogram the system firmware.
2BA00040	Service processor reports service processor VPD module not present.	1. Use the service processor firmware diskette to reprogram the service processor firmware. 2. Replace the I/O board. (See note on page 93.)
2BA00041	Service processor VPD is corrupted.	1. Use the service processor firmware diskette to reprogram the service processor firmware. 2. Replace the I/O board. (See note on page 93.)
2BA00050	Service processor reports system operator panel VPD module not present or not recognizable.	Replace the operator panel control assembly. (See note on page 93.) **Note:** Swap the old VPD module from the old operator panel control assembly to the new one.
2BA00051	System operator panel VPD data corrupted.	Replace the operator panel control assembly. (See note on page 93.) **Note:** Swap the old VPD module from the old operator panel control assembly to the new one.
2BA00052	Service processor reports node supervisor VPD data corrupted	Replace node supervisor card
2BA00053	Service processor reports node supervisor VPD module not present.	Replace node supervisor card
2BA00060	Service processor reports I/O board VPD module not present.	Replace the I/O board. (See note on page 93.)
2BA00061	Service processor reports I/O board VPD data corrupted.	Replace the I/O board. (See note on page 93.)
2BA00062	Service processor reports system board VPD module not present.	Replace the system board.
2BA00063	Service processor reports system board VPD data corrupted.	Replace the system board.
2BA00064	Service processor reports PCI riser card VPD module not present.	Replace PCI riser card
2BA00065	Service processor reports PCI riser card VPD data corrupted.	Replace PCI riser card

Table 3. Firmware Error Codes. (continued)

Error Code	Description	Action / Possible Failing FRU
2BA00066	Service processor reports PCI expansion card VPD module not present.	Replace PCI expansion card
2BA00067	Service processor reports PCI expansion card VPD data corrupted.	Replace PCI expansion card
2BA00070	Service processor reports processor card VPD module not present.	Replace the processor card(s).
2BA00071	VPD data corrupted for processor card in slot J6.	Replace the processor card in slot J6.
2BA00073	VPD data corrupted for processor card in slot J8.	Replace the processor card in slot J8.
2BA00080	Service processor reports memory card VPD module not present.	Replace memory card(s).
2BA00081	VPD data corrupted for memory card in slot J3.	Replace memory card in slot J3.
2BA00083	VPD data corrupted for memory card in slot J2.	Replace memory card in slot J2.
2BA00100	Service processor firmware recovery information could not be written to diskette.	1. Check diskette media write protect tab. 2. Replace the diskette drive.
2BA00101	Service processor is *not* installed, update canceled.	1. Replace I/O board. (See note on page93 2. Retry operation
2BA00102	No service processor update diskette in drive.	Insert the diskette.
2BA00103	Service processor firmware update file is corrupted, update canceled.	1. Obtain new service processor firmware diskette. 2. Retry operation.
2BA00104	Service processor firmware update file is the same level as the service processor firmware, update canceled.	1. Obtain new level of service processor firmware. 2. Retry operation.
2BA00200	Service processor firmware update error occurred; update not completed. Error occurred during service processor flash write operation.	Service processor firmware update error recovery procedure: 1. Turn the system off. 2. Unplug power cable and then plug power cable back in. 3. Turn the system on. 4. Retry operation. If problem persists, replace service processor.

Table 3. Firmware Error Codes. (continued)

Error Code	Description	Action / Possible Failing FRU
2BA00201	Service processor firmware update error occurred; update not completed. Error occurred while reading service processor firmware CRC.	See error code 2BA00200 for recovery procedure.
2BA00202	Service processor firmware update error occurred; update not completed. Error occurred while verifying service processor firmware CRC.	See error code 2BA00200 for recovery procedure.
2BA00203	Service processor firmware update error occurred; update not completed. Error occurred while reading new service processor firmware CRC after updating service processor firmware.	See error code 2BA00200 for recovery procedure.
2BA00204	Service processor firmware update error occurred; update not completed. Error occurred while calculating firmware CRC.	See error code 2BA00200 for recovery procedure.
2BA00300	Service processor reports slow fan number 1.	1. Replace fan 1. 2. If problem persists, replace power supply. 3. Replace I/O board. (See note on page 93.)
2BA00301	Service processor reports slow fan number 2.	1. Replace fan 2. 2. If problem persists, replace power supply. 3. Replace I/O board. (See note on page 93.)
2BA00302	Service processor reports slow fan number 3.	1. Replace fan 3. 2. If problem persists, replace power supply. 3. Replace I/O board. (See note on page 93.)
2BA00303	Service processor reports slow fan number 4.	1. Replace fan 4. 2. If problem persists, replace power supply. 3. Replace I/O board. (See note on page 93.)

Table 3. Firmware Error Codes. (continued)

Error Code	Description	Action / Possible Failing FRU
2BA00309	Service processor reports generic cooling alert.	1. Check for cool air flow obstructions to the system. 2. Replace I/O board. (See note on page 93.)
2BA00310	Service processor reports processor card over temperature alert.	1. Check for cool air flow obstructions to the system. 2. If the problem persists, replace processor card.
2BA00311	Service processor reports I/O over temperature alert.	1. Check for cool air flow obstructions to the system. 2. Replace I/O board. (See note on page 93.)
2BA00312	Service processor reports memory over temperature alert.	1. Check for cool air flow obstructions to the system. 2. Replace memory card.
2BA00313	Service processor reports generic power alert.	1. Replace power supply. 2. Replace I/O board. (See note on page 93.)
2BA00314	Service processor reports 5V over voltage alert.	1. Replace power supply. 2. Replace I/O board. (See note on page 93.)
2BA00315	Service processor reports 5V under voltage alert.	1. Replace power supply. 2. Replace I/O board. (See note on page 93.)
2BA00316	Service processor reports 3.3 V over voltage alert.	1. Replace power supply. 2. Replace I/O board. (See note on page 93.)
2BA00317	Service processor reports 3.3 V under voltage alert.	1. Replace power supply. 2. Replace I/O board. (See note on page 93.)
2BA00318	Service processor reports 2.5 V over voltage alert.	1. Replace power supply. 2. Replace I/O board. (See note on page 93.)
2BA00319	Service processor reports 2.5 V under voltage alert.	1. Replace power supply. 2. Replace I/O board. (See note on page 93.)
2BA00320	Service processor reports +12 V over voltage alert.	1. Replace power supply. 2. Replace I/O board. (See note on page 93.)
2BA00321	Service processor reports +12 V under voltage alert.	1. Replace power supply. 2. Replace I/O board. (See note on page 93.)
2BA00322	Service processor reports -12 V over voltage alert.	1. Replace power supply. 2. Replace I/O board. (See note on page 93.)

Table 3. Firmware Error Codes. (continued)

Error Code	Description	Action / Possible Failing FRU
2BA00323	Service processor reports -12 V under voltage alert.	1. Replace power supply. 2. Replace I/O board. (See note on page 93.)
2BA00324	Service processor reports 5 V standby over voltage alert.	1. Replace power supply. 2. Replace I/O board. (See note on page 93.)
2BA00325	Service processor reports 5 V standby under voltage alert.	1. Replace power supply. 2. Replace I/O board. (See note on page 93.)
2BA00326	Service processor reports PCI expansion card 5 V over voltage alert.	1. Replace power supply. 2. Replace I/O board. (See note on page 93.)
2BA00327	Service processor reports PCI expansion card 5 V under voltage alert.	1. Replace power supply. 2. Replace I/O board. (See note on page 93.)
2BA00328	Service processor reports PCI expansion card 3.3 V over voltage alert.	1. Replace power supply. 2. Replace I/O board. (See note on page 93.)
2BA00329	Service processor reports PCI expansion card 3.3 V under voltage alert.	1. Replace power supply. 2. Replace I/O board. (See note on page 93.)
2BA00330	Service processor reports PCI expansion card +12 V over voltage alert.	1. Replace power supply. 2. Replace I/O board. (See note on page 93.)
2BA00331	Service processor reports PCI expansion card +12 V under voltage alert.	1. Replace power supply. 2. Replace I/O board. (See note on page 93.)
2BA00332	Service processor reports PCI expansion card -12 V over voltage alert.	1. Replace power supply. 2. Replace I/O board. (See note on page 93.)
2BA00333	Service processor reports PCI expansion card -12 V under voltage alert.	1. Replace power supply. 2. Replace I/O board. (See note on page 93.)
2BA00334	Service processor reports generic slow shutdown request.	1. Replace power supply. 2. Replace I/O board. (See note on page 93.)
2BA00335	Service processor reports processor card critical over temperature slow shutdown request.	1. Check for cool air flow obstructions to the system. 2. Check fans for obstructions that prevent them from normal operation (example: a cable caught in the fan preventing it from spinning). 3. If problem persists, replace processor board.

Table 3. Firmware Error Codes. (continued)

Error Code	Description	Action / Possible Failing FRU
2BA00336	Service processor reports I/O critical over temperature slow shutdown request.	1. Check for cool air flow obstructions to the system. 2. Check fans for obstructions that prevent them from normal operation (example: a cable caught in the fan preventing it from spinning). 3. If problem persists, replace I/O board. (See note on page 93.)
2BA00337	Service processor reports memory critical over temperature slow shutdown request.	1. Check for cool air flow obstructions to the system. 2. Check fans for obstructions that prevent them from normal operation (example: a cable caught in the fan preventing it from spinning) 3. If problem persists, replace memory card.
2BA00338	Service processor reports generic fast shutdown request.	1. Replace power supply. 2. Replace I/O board. (See note on page 93.)
2BA00340	Service processor reports locked fan - fast shutdown request fan number 1.	1. Replace fan 1. 2. If problem persists, replace power supply. 3. Replace I/O board. (See note on page 93.)
2BA00341	Service processor reports locked fan - fast shutdown request fan number 2.	1. Replace fan 2. 2. If problem persists, replace power supply. 3. Replace I/O board. (See note on page 93.)
2BA00342	Service processor reports locked fan - fast shutdown request fan number 3	1. Replace fan 3. 2. If problem persists, replace power supply. 3. Replace I/O board. (See note on page 93.)
2BA00343	Service processor reports locked fan - fast shutdown request fan number 4	1. Replace fan 4. 2. If problem persists, replace power supply. 3. Replace I/O board. (See note on page 93.)
2BA00350	Service processor reports generic immediate shutdown request.	1. Replace power supply. 2. Replace I/O board. (See note on page 93.)
2BA00351	Service processor reports generic ac power loss EPOW.	1. Replace power supply. 2. Replace I/O board. (See note on page 93.)
2BA00352	Service processor reports loss of ac power (outlet).	1. Replace power supply. 2. Replace I/O board. (See note on page 93.)

Table 3. Firmware Error Codes. (continued)

Error Code	Description	Action / Possible Failing FRU
2BA00353	Service processor reports loss of ac power (power button).	1. Replace power supply. 2. Replace I/O board. (See note on page 93.)
2BA00399	Service processor reports unsupported value in EPOW.	1. Check EPOW cabling on SCSI or SSA backplanes. 2. Replace I/O board. (See note on page 93.)
40100005	Loss of system power detected.	Possible main power loss. If not, replace the power supply.
40100006	Loss of system ac power detected	Possible main power loss. If not, replace the power supply.
40100007	Immediate shutdown.	Possible main power loss. If not, replace power supply.
40110001	Power supply failed.	1. Look at the service processor error log for more error information. 2. Check the power cable to connector on the I/O board. 3. Power supply 4. I/O board. (See note 3 on page 93.)
40110002	Voltage not detected on either processor card.	1. Check power supply connectors on I/O board. 2. Replace power supply
40110003	Voltage not detected on one processor card.	1. Processor card. If the system is running AIX look at the AIX error log to see which processor card is failing. 2. If the system is not running, look at the service processor error log.
40110004	Low voltage detected in power supply main enclosure.	1. Check the connections between the power supply connectors and to the I/O board connectors. 2. Power supply
40110005	Fan warning detected in power supply main enclosure.	1. Check the connections between the power supply connectors and to the I/O board connectors. 2. Power supply
40110006	Fan failure detected in power supply main enclosure.	1. Check the connections between the power supply connectors and to the I/O board connectors. 2. Power supply
40110007	Thermal warning detected in power supply main enclosure.	1. Check the connections between the power supply connectors and to the I/O board connectors. 2. Power supply

Table 3. Firmware Error Codes. (continued)

Error Code	Description	Action / Possible Failing FRU
40110008	Thermal failure detected in power supply main enclosure.	1. Check the connections between the power supply connectors and to the I/O board connectors. 2. Power supply
40110009	Overcurrent on the main 5.0 V was detected by the power supply.	1. Check the connections between the power supply connectors and to the I/O board connectors. 2. Power supply
4011000A	Overcurrent on the processor card 5.0 V output was detected by the power supply.	1. Possible processor card problem. 2. Go to ″MAP 1520: Power “Step 1520-3” on page 46. 3. Processor card 4. Power supply
4011000B	High 5.0 RA volt detected in power supply main enclosure.	1. Check connector on the I/O board. 2. Replace power supply.
4011000C	High 3.3 M volt detected in power supply main enclosure.	1. Check connector on the I/O board. 2. Replace power supply.
4011000D	Overcurrent on the 3.3 V output was detected by the power supply.	1. Check the connections between the power supply connectors and to the I/O board connectors. 2. Power supply
4011000E	Overcurrent on the +12.0 V output was detected by the power supply.	1. Check the connections between the power supply connectors and to the I/O board connectors. 2. Power supply
4011000F	Overcurrent on the -12.0 V output was detected by the power supply.	1. Check the connections between the power supply connectors and to the I/O board connectors. 2. Power supply
40110012	Voltage not found on I/O expansion board.	1. Check power interlock tab on I/O expansion power FRU. 2. Check power cable at I/O expansion board for proper seating. 3. Check interposer signal cable. 4. Check I/O expansion control cable. 5. Replace power supply. 6. Replace I/O expansion board. 7. Replace I/O expansion control cable, I/O expansion power cable and interposer signal cable assemblies. 8. Replace interposer card.
40111002	Unknown power problem detected.	Power supply.
40111022	A high 5.0 V reading detected.	1. Power supply. 2. Replace the I/O board. (See note on page 93.

Table 3. Firmware Error Codes. (continued)

Error Code	Description	Action / Possible Failing FRU
40111032	A high 3.3 V reading detected.	1. Power supply 2. Replace the I/O board. (See note on page 93.
40111033	A high 2.5 voltage reading detected.	1. Power supply 2. Processor card
40111052	A high +12 voltage reading detected.	1. Power supply. 2. I/O board. (See note on page 93.)
40111062	A high –12 voltage reading detected.	1. Power supply. 2. I/O board. (See note on page 93.)
40111072	A high +5 V standby voltage reading detected.	1. Replace the I/O board. (See note on page 93. 2. Power supply.
40111082	A low 5.0 V reading detected.	1. Power supply. 2. I/O board. (See note on page 93.)
40111092	A low 3.3 V reading detected.	1. Power supply. 2. Replace the I/O board. (See note on page 93.
40111093	A low 2.5 voltage reading detected.	1. Power supply. 2. Processor card.
401110B2	A low +12 voltage reading detected.	1. Power supply. 2. I/O board. (See note on page 93.)
401110C2	A low –12 voltage reading detected.	1. Power supply. 2. I/O board. (See note on page 93.)
401110D2	A low +5 standby V reading detected.	1. Power supply. 2. Replace the I/O board. (See note on page 93.
40111101	Power good signal low on the processor card.	1. Processor card. If the system is running AIX look at the AIX error log to see which processor card is failing. 2. If the system is not running, look at the service processor error log.
40111102	Wrong processor card plugged into the system.	1. Remove processor card 2. Verify part number 3. Install valid card
40111122	A high PCI + 5.0 voltage reading detected.	1. Replace power supply 2. Replace I/O expansion board.
40111132	A high PCI + 3.3 voltage reading detected.	1. Replace power supply 2. Replace I/O expansion board.
40111152	A high PCI + 12.0 voltage reading detected.	1. Replace power supply 2. Replace I/O expansion board.
40111162	A high PCI - 12.0 voltage reading detected.	1. Replace power supply 2. Replace I/O expansion board.

Table 3. Firmware Error Codes. (continued)

Error Code	Description	Action / Possible Failing FRU
40111182	A low PCI + 5.0 voltage reading detected.	1. Replace power supply 2. Replace I/O expansion board.
40111192	A low PCI + 3.3 voltage reading detected.	1. Replace power supply 2. Replace I/O expansion board.
401111B2	A low PCI + 12.0 voltage reading detected.	1. Replace power supply 2. Replace I/O expansion board.
401111C2	A low PCI - 12.0 voltage reading detected.	1. Replace power supply 2. Replace I/O expansion board.
40112022	A high 5.0 voltage reading detected.	1. Replace power supply. 2. Replace processor card.
40112023	A high 1.8 voltage reading detected.	1. Replace power supply. 2. Replace processor card.
40112032	A high 3.3 voltage reading detected.	1. Replace power supply. 2. Replace I/O board. (See note on page 93.)
40112033	A high 2.5 voltage reading detected.	1. Replace power supply. 2. Replace processor card.
40112052	A high +12 voltage reading detected.	1. Replace power supply. 2. I/O board. (See note on page 93.)
40112061	A high -12 voltage reading detected.	1. Replace power supply. 2. I/O board. (See note on page 93.)
40112062	A low 1.8 voltage reading detected.	1. Replace power supply. 2. Replace processor card.
40112063	A critically low 1.8 voltage reading detected.	1. Replace power supply. 2. Replace processor card.
40112064	A critically high 1.8 voltage reading detected.	1. Replace power supply. 2. Replace processor card.
40112065	A critically low 2.5 voltage reading detected.	1. Replace power supply. 2. Replace processor card.
40112066	A critically high 2.5 voltage reading detected.	1. Replace power supply. 2. Replace processor card.
40112082	A low 5.0 voltage reading detected.	1. Replace power supply. 2. Replace processor card.
40112092	A low 3.3 voltage reading detected.	1. Replace power supply. 2. I/O board. (See note on page 93.)
40112093	A low 5.0 voltage reading detected.	1. Replace power supply. 2. Replace processor card.
401120B2	A low +12 voltage reading detected.	1. Replace power supply. 2. I/O board. (See note on page 93.)
401120C2	A low -12 voltage reading detected.	1. Replace power supply. 2. I/O board. (See note on page 93.)
40200001	An unknown cooling problem detected.	Check/replace system fans.

Table 3. Firmware Error Codes. (continued)

Error Code	Description	Action / Possible Failing FRU
40200021	A processor card temperature warning detected.	1. Check system fans. 2. Replace processor card(s).
40200023	A critical processor card temperature condition detected.	1. Check system fans. 2. Replace processor card(s).
40200031	An I/O board temperature warning detected.	1. Check system fans. 2. I/O board. (See note on page 93.)
40200033	A critical I/O board temperature condition detected.	1. Check system fans. 2. I/O board. (See note on page 93.)
40200051	An inlet temperature warning detected. (High temperature sensed at the air flow inlet).	1. Check/replace system fans. 2. I/O board. (See note on page 93.)
40200053	An inlet memory temperature condition detected. (Critically high temperature sensed at the air flow inlet).	1. Check/replace system fans. 2. I/O board. (See note on page 93.)
40210011	A slow fan detected.	1. Check fan connector 2. Replace failing fan.
40210014	A stopped fan detected.	1. Check fan connector 2. Replace failing fan.
40A00000	System firmware IPL failure.	1. Press enter on an attached ASCII terminal keyboard to go into the service processor menus. 2. Select **System Information Menu**. 3. Select ″**Read Progress Indicators from Last System Boot**″ and do the action indicated for the posted code identified by the arrow. If no arrow is present, do the action indicated for the 4- or 8-digit code that appears immediately below 40A00000. **Note:** Refer to ″SP checkpoints″ or ″Firmware checkpoints″ for help.
40B00000	The operating system surveillance interval exceeded.	1. Surveillance mode control is from the service processor menus. 2. Verify that the operating system (OS) heartbeat utility is installed and has been activated. 3. Check for errors or unusual conditions that might prevent the OS from reporting heartbeat messages, such as system dump, machine check or checkstop error. Review the error log. 4. I/O board. (See note on page 93.) 5. If the problem persists, call the support center for assistance.

Table 3. Firmware Error Codes. (continued)

Error Code	Description	Action / Possible Failing FRU
40D00003	An unknown slow shutdown occurred.	Critical cooling problem. Check to ensure the temperature is in the ambient range.
40D00004	An unknown fast shutdown occurred.	Locked fan failure detected. Make sure all fans are operating normally.
40D00101	BIST on I/O board failed.	Replace I/O board. (See note on page 93.)
40D00102	BIST on system board failed.	Replace system board.
40D00200	Processor array initialization failed.	Location code will point to failing FRU.
40D00201	JTAG chip ID miscompare.	Location code will point to failing FRU.
450000C0	Uncorrectable memory error (checkstop).	1. If a physical location code is displayed in the operator panel or by AIX diagnostics, replace the FRU as indicated by the location code. If a physical location code is not available, continue. 2. In the service processor menus, go to ″Read Progress Indicators from last System Boot″. If an arrow is pointing to a location code replace the FRU at that location code. If there is no arrow pointing to a location code, continue. 3. Go to “MAP 1540: Minimum Configuration” on page 50.
450000C1	Memory ECC correctable error (checkstop).	1. If a physical location code is displayed in the operator panel or by AIX diagnostics, replace the FRU as indicated by the location code. If a physical location code is not available, continue. 2. In the service processor menus, go to ″Read Progress Indicators from last System Boot″. If an arrow is pointing to a location code replace the FRU at that location code. If there is no arrow pointing to a location code, continue. 3. Go to “MAP 1540: Minimum Configuration” on page 50.

Table 3. Firmware Error Codes. (continued)

Error Code	Description	Action / Possible Failing FRU
450000C2	Memory ECC correctable error threshold exceeded (checkstop).	1. If a physical location code is displayed in the operator panel or by AIX diagnostics, replace the FRU as indicated by the location code. If a physical location code is not available, continue. 2. In the service processor menus, go to ″Read Progress Indicators from last System Boot″. If an arrow is pointing to a location code replace the FRU at that location code. If there is no arrow pointing to a location code, continue. 3. Go to “MAP 1540: Minimum Configuration” on page 50.
450000C3	Memory controller subsystem internal error (checkstop).	1. If a physical location code is displayed in the operator panel or by AIX diagnostics, replace the FRU as indicated by the location code. If a physical location code is not available, continue. 2. In the service processor menus, go to ″Read Progress Indicators from last System Boot″. If an arrow is pointing to a location code replace the FRU at that location code. If there is no arrow pointing to a location code, continue. 3. Go to “MAP 1540: Minimum Configuration” on page 50.
450000C4	Memory address error (invalid address or access attempt) (checkstop).	1. If a physical location code is displayed in the operator panel or by AIX diagnostics, replace the FRU as indicated by the location code. If a physical location code is not available, continue. 2. In the service processor menus, go to ″Read Progress Indicators from last System Boot″. If an arrow is pointing to a location code replace the FRU at that location code. If there is no arrow pointing to a location code, continue. 3. Go to“MAP 1540: Minimum Configuration” on page 50.

Table 3. Firmware Error Codes. (continued)

Error Code	Description	Action / Possible Failing FRU
450000C5	Memory data error (bad data going to memory) (checkstop).	1. If a physical location code is displayed in the operator panel or by AIX diagnostics, replace the FRU as indicated by the location code. If a physical location code is not available, continue. 2. In the service processor menus, go to ″Read Progress Indicators from last System Boot″. If an arrow is pointing to a location code replace the FRU at that location code. If there is no arrow pointing to a location code, continue. 3. Go to“MAP 1540: Minimum Configuration” on page 50.
450000C6	Memory bus/switch internal error (checkstop).	1. If a physical location code is displayed in the operator panel or by AIX diagnostics, replace the FRU as indicated by the location code. If a physical location code is not available, continue. 2. In the service processor menus, go to ″Read Progress Indicators from last System Boot″. If an arrow is pointing to a location code replace the FRU at that location code. If there is no arrow pointing to a location code, continue. 3. Go to “MAP 1540: Minimum Configuration” on page 50.
450000C7	Memory time-out error (checkstop).	1. If a physical location code is displayed in the operator panel or by AIX diagnostics, replace the FRU as indicated by the location code. If a physical location code is not available, continue. 2. In the service processor menus, go to ″Read Progress Indicators from last System Boot″. If an arrow is pointing to a location code replace the FRU at that location code. If there is no arrow pointing to a location code, continue. 3. Go to “MAP 1540: Minimum Configuration” on page 50.

Table 3. Firmware Error Codes. (continued)

Error Code	Description	Action / Possible Failing FRU
450000D0	System bus time-out error (checkstop).	1. If a physical location code is displayed in the operator panel or by AIX diagnostics, replace the FRU as indicated by the location code. If a physical location code is not available, continue. 2. In the service processor menus, go to ″Read Progress Indicators from last System Boot″. If an arrow is pointing to a location code replace the FRU at that location code. If there is no arrow pointing to a location code, continue. 3. Go to“MAP 1540: Minimum Configuration” on page 50.
450000D1	System bus parity error (checkstop).	1. If a physical location code is displayed in the operator panel or by AIX diagnostics, replace the FRU as indicated by the location code. If a physical location code is not available, continue. 2. In the service processor menus, go to ″Read Progress Indicators from last System Boot″. If an arrow is pointing to a location code replace the FRU at that location code. If there is no arrow pointing to a location code, continue. 3. Go to “MAP 1540: Minimum Configuration” on page 50.
450000D2	System bus protocol/transfer error (checkstop).	1. If a physical location code is displayed in the operator panel or by AIX diagnostics, replace the FRU as indicated by the location code. If a physical location code is not available, continue. 2. In the service processor menus, go to ″Read Progress Indicators from last System Boot″. If an arrow is pointing to a location code replace the FRU at that location code. If there is no arrow pointing to a location code, continue. 3. Go to “MAP 1540: Minimum Configuration” on page 50.

Table 3. Firmware Error Codes. (continued)

Error Code	Description	Action / Possible Failing FRU
450000D3	I/O host bridge time-out error (checkstop).	1. If a physical location code is displayed in the operator panel or by AIX diagnostics, replace the FRU as indicated by the location code. If a physical location code is not available, continue. 2. In the service processor menus, go to ″Read Progress Indicators from last System Boot″. If an arrow is pointing to a location code replace the FRU at that location code. If there is no arrow pointing to a location code, continue. 3. Go to “MAP 1540: Minimum Configuration” on page 50.
450000D4	I/O host bridge address/data bus parity error (checkstop).	1. If a physical location code is displayed in the operator panel or by AIX diagnostics, replace the FRU as indicated by the location code. If a physical location code is not available, continue. 2. In the service processor menus, go to ″Read Progress Indicators from last System Boot″. If an arrow is pointing to a location code replace the FRU at that location code. If there is no arrow pointing to a location code, continue. 3. Go to “MAP 1540: Minimum Configuration” on page 50.
450000D6	System support function error (checkstop).	1. If a physical location code is displayed in the operator panel or by AIX diagnostics, replace the FRU as indicated by the location code. If a physical location code is not available, continue. 2. In the service processor menus, go to ″Read Progress Indicators from last System Boot″. If an arrow is pointing to a location code replace the FRU at that location code. If there is no arrow pointing to a location code, continue. 3. Go to “MAP 1540: Minimum Configuration” on page 50.

Table 3. Firmware Error Codes. (continued)

Error Code	Description	Action / Possible Failing FRU
450000D7	System bus internal hardware/switch error (checkstop).	1. If a physical location code is displayed in the operator panel or by AIX diagnostics, replace the FRU as indicated by the location code. If a physical location code is not available, continue. 2. In the service processor menus, go to ″Read Progress Indicators from last System Boot″. If an arrow is pointing to a location code replace the FRU at that location code. If there is no arrow pointing to a location code, continue. 3. Go to “MAP 1540: Minimum Configuration” on page 50.)
450000DA	All processor were found deconfigured, so the service processor reconfigured the best system processor that was available.	This SRN indicates that the corresponding FRU has been reconfigured, but it is not a warning or an error that this FRU is defective. If problem persists with the reconfigured processor even after power-on, replace the defective FRUs as indicated in service processor error log.
450000DB	All DIMM pairs were found deconfigured, so the service processor reconfigured the best DIMM pair that was available.	1. This SRN indicates that the corresponding FRU has been reconfigured, but it is not a warning or an error that this FRU is defective. If problem persists with the reconfigured DIMM pair even after power-on, replace it. 2. Replace the all DIMM pairs.
45800000	Memory controller checkstop.	1. Go to “MAP 1540: Minimum Configuration” on page 50. 2. Replace system board. 3. Replace I/O board. (See note on page 93.)
45C00000	Memory checkstop. (Uncorrectable memory error.)	1. Attempt to reboot the system in service mode to preserve the AIX error log. If the reboot fails, attempt to reboot from the CD-ROM. If the reboot is successful, run diagnostics in problem determination mode to determine the cause of the failure. 2. Replace system board. 3. Go to “MAP 1540: Minimum Configuration” on page 50.

Table 3. Firmware Error Codes. (continued)

Error Code	Description	Action / Possible Failing FRU
460000C0	I/O bus address parity error (checkstop).	1. If a physical location code is displayed in the operator panel or by AIX diagnostics, replace the FRU as indicated by the location code. If a physical location code is not available, continue. 2. In the service processor menus, go to ″Read Progress Indicators from last System Boot″. If an arrow is pointing to a location code replace the FRU at that location code. If there is no arrow pointing to a location code, continue. 3. Go to “MAP 1540: Minimum Configuration” on page 50.
460000C1	I/O bus data parity error (checkstop).	1. If a physical location code is displayed in the operator panel or by AIX diagnostics, replace the FRU as indicated by the location code. If a physical location code is not available, continue. 2. In the service processor menus, go to ″Read Progress Indicators from last System Boot″. If an arrow is pointing to a location code replace the FRU at that location code. If there is no arrow pointing to a location code, continue. 3. Go to “MAP 1540: Minimum Configuration” on page 50.
460000C2	I/O bus time-out, access or other error (checkstop).	1. If a physical location code is displayed in the operator panel or by AIX diagnostics, replace the FRU as indicated by the location code. If a physical location code is not available, continue. 2. In the service processor menus, go to ″Read Progress Indicators from last System Boot″. If an arrow is pointing to a location code replace the FRU at that location code. If there is no arrow pointing to a location code, continue. 3. Go to “MAP 1540: Minimum Configuration” on page 50.

Table 3. Firmware Error Codes. (continued)

Error Code	Description	Action / Possible Failing FRU
460000C3	I/O bridge/device internal error (checkstop).	1. If a physical location code is displayed in the operator panel or by AIX diagnostics, replace the FRU as indicated by the location code. If a physical location code is not available, continue. 2. In the service processor menus, go to ″Read Progress Indicators from last System Boot″. If an arrow is pointing to a location code replace the FRU at that location code. If there is no arrow pointing to a location code, continue. 3. Go to “MAP 1540: Minimum Configuration” on page 50.
460000C4	Error from a PCI to non-PCI bridge chip, indicating an error on the secondary bus	1. If a physical location code is displayed in the operator panel or by AIX diagnostics, replace the FRU as indicated by the location code. If a physical location code is not available, continue. 2. In the service processor menus, go to ″Read Progress Indicators from last System Boot″. If an arrow is pointing to a location code replace the FRU at that location code. If there is no arrow pointing to a location code, continue. 3. Go to “MAP 1540: Minimum Configuration” on page 50.
460000C5	Mezzanine/system bus address parity error (checkstop).	1. If a physical location code is displayed in the operator panel or by AIX diagnostics, replace the FRU as indicated by the location code. If a physical location code is not available, continue. 2. In the service processor menus, go to ″Read Progress Indicators from last System Boot″. If an arrow is pointing to a location code replace the FRU at that location code. If there is no arrow pointing to a location code, continue. 3. Go to “MAP 1540: Minimum Configuration” on page 50.

Table 3. Firmware Error Codes. (continued)

Error Code	Description	Action / Possible Failing FRU
460000C6	Mezzanine/system bus data parity error (checkstop).	1. If a physical location code is displayed in the operator panel or by AIX diagnostics, replace the FRU as indicated by the location code. If a physical location code is not available, continue. 2. In the service processor menus, go to ″Read Progress Indicators from last System Boot″. If an arrow is pointing to a location code replace the FRU at that location code. If there is no arrow pointing to a location code, continue. 3. Go to “MAP 1540: Minimum Configuration” on page 50.
460000C7	Mezzanine/system bus time-out, transfer or protocol error (checkstop).	1. If a physical location code is displayed in the operator panel or by AIX diagnostics, replace the FRU as indicated by the location code. If a physical location code is not available, continue. 2. In the service processor menus, go to ″Read Progress Indicators from last System Boot″. If an arrow is pointing to a location code replace the FRU at that location code. If there is no arrow pointing to a location code, continue. 3. Go to “MAP 1540: Minimum Configuration” on page 50.
460000D4	I/O expansion bus data parity or CRC error protocol error (checkstop).	1. If a physical location code is displayed in the operator panel or by AIX diagnostics, replace the FRU as indicated by the location code. If a physical location code is not available, continue. 2. In the service processor menus, go to ″Read Progress Indicators from last System Boot″. If an arrow is pointing to a location code replace the FRU at that location code. If there is no arrow pointing to a location code, continue. 3. Go to “MAP 1540: Minimum Configuration” on page 50.

Table 3. Firmware Error Codes. (continued)

Error Code	Description	Action / Possible Failing FRU
460000D5	I/O expansion bus data time-out, access or other error (checkstop).	1. If a physical location code is displayed in the operator panel or by AIX diagnostics, replace the FRU as indicated by the location code. If a physical location code is not available, continue. 2. In the service processor menus, go to ″Read Progress Indicators from last System Boot″. If an arrow is pointing to a location code replace the FRU at that location code. If there is no arrow pointing to a location code, continue. 3. Go to “MAP 1540: Minimum Configuration” on page 50.
460000D6	I/O expansion bus connection failure (checkstop).	1. If a physical location code is displayed in the operator panel or by AIX diagnostics, replace the FRU as indicated by the location code. If a physical location code is not available, continue. 2. In the service processor menus, go to ″Read Progress Indicators from last System Boot″. If an arrow is pointing to a location code replace the FRU at that location code. If there is no arrow pointing to a location code, continue. 3. Go to “MAP 1540: Minimum Configuration” on page 50.
460000D7	I/O expansion bus unit not in an operating state (power down, off-line) (checkstop).	1. If a physical location code is displayed in the operator panel or by AIX diagnostics, replace the FRU as indicated by the location code. If a physical location code is not available, continue. 2. In the service processor menus, go to ″Read Progress Indicators from last System Boot″. If an arrow is pointing to a location code replace the FRU at that location code. If there is no arrow pointing to a location code, continue. 3. Go to “MAP 1540: Minimum Configuration” on page 50.

Table 3. Firmware Error Codes. (continued)

Error Code	Description	Action / Possible Failing FRU
460000D8	A generic memory controller-detected checkstop has occurred.	1. Try to reboot the system in service mode to preserve the AIX error log. Run diagnostics in problem determination mode to determine the cause of the failure if a new SRN or error code is generated, follow the actions for that code. 2. Try to boot AIX diagnostics from CD-ROM. • If the boot is successful, run advanced diagnostics and follow the actions for any SRN or error code that is generated. If the same error code is generated, go to “MAP 1540: Minimum Configuration” on page 50. • If AIX standalone diagnostics do not boot, follow the actions for any new SRN or error code that is generated. If the same error code is generated, go to“MAP 1540: Minimum Configuration” on page 50.
460000D9	A generic I/O controller-detected, checkstop has occurred.	1. Try to reboot the system in service mode to preserve the AIX error log. Run diagnostics in problem determination mode to determine the cause of the failure if a new SRN or error code is generated, follow the actions for that code. 2. Try to boot AIX diagnostics from CD-ROM. • If the boot is successful, run advanced diagnostics and follow the actions for any SRN or error code that is generated. If the same error code is generated, go to “MAP 1540: Minimum Configuration” on page 50. • If AIX standalone diagnostics do not boot, follow the actions for any new SRN or error code that is generated. If the same error code is generated, go to “MAP 1540: Minimum Configuration” on page 50.

Table 3. Firmware Error Codes. (continued)

Error Code	Description	Action / Possible Failing FRU
48800909	System VPD error.	1. Check cable to operator panel. 2. Replace operator panel. 3. Replace I/O board. (See note on page 93.) 4. Go to “MAP 1540: Minimum Configuration” on page 50.
4880090A	System planar VPD read fail.	1. Replace system planar. 2. Replace I/O board. (See note on page 93.)
4880090B	Error identifying system type using VPD.	1. Check power supply cables. 2. Call for support.
4880090C	JTAG unable to confirm system type using system VPD.	1. Remove cards. 2. Verify part numbers. 3. Install valid cards. 4. Call for support.

Table 3. Firmware Error Codes. (continued)

Error Code	Description	Action / Possible Failing FRU
4B2xxx00	Checkstop	1. Press enter on an attached ASCII terminal keyboard to go into the service processor menus. 2. Select **System Information Menu**. 3. Select ″**Read Progress Indicators from Last System Boot**″ and use the posted code indicated by the arrow. Refer to “Service Processor Menus” on page 151 if you need help. If the code is ″E105″, E14D, E15B, E174, E175, or ″0xxx″, where xxx is any 3 digits, continue to step 4 instead of the listed action. Otherwise, find the code in the “Service Processor Checkpoints” on page 71 or “Firmware Checkpoints” on page 75 and perform the action shown there. 4. Attempt to reboot the system in service mode to preserve the AIX error log. If the reboot fails, attempt to reboot from the CD-ROM. If the reboot is successful, run diagnostics in problem determination mode to determine the cause of the failure. Otherwise, continue. 5. Remove processor card in slot J8 (if installed) and see if the problem is resolved. If problem is resolved replace processor card. If not, continue. 6. Exchange processor card in slot J6 with processor card removed from slot J8 in step 1 (replace processor card if only one processor card is exists) and see if the problem is resolved. If problem is resolved, replace processor card. If not, continue. 7. Go to MAP 1540: Minimum Configuration, “Step 1540-2” on page 52.

Table 3. Firmware Error Codes. (continued)

Error Code	Description	Action / Possible Failing FRU
4B2xxx01	Checkstop - Slot 1 (J6) Fail	1. Attempt to reboot the system in service mode to preserve the AIX error log. If the reboot fails, attempt to reboot from CD-ROM. If the reboot is successful, run diagnostics in problem determination mode to determine the cause of the failure. Otherwise, continue. 2. Processor card in slot 1 (J6) 3. System board 4. I/O board (See note on page 93.)
4B2xxx02	Checkstop - Slot 2 (J8) Fail	1. Attempt to reboot the system in service mode to preserve the AIX error log. If the reboot fails, attempt to reboot from the CD-ROM. If the reboot is successful, run diagnostics in problem determination mode to determine the cause of the failure. Otherwise, continue. 2. Processor card in slot 2 (J8) 3. System board 4. I/O board (See note on page 93.)
4B2xxx10	Machine Check - 0	1. Attempt to reboot the system in service mode to preserve the AIX error log. If the reboot fails, attempt to reboot from the CD-ROM. If the reboot is successful, run diagnostics in problem determination mode to determine the cause of the failure. Otherwise, continue. 2. Remove processor card in slot 2 (J8) (if installed) and see if the problem is resolved. If problem is resolved, replace processor card. If not, continue. 3. Exchange processor card in slot 1 (J6) with processor card removed from slot 2 (J8) in step 1 (replace processor card if only one processor card exists) and see if the problem is resolved. If problem is resolved, replace processor card. If not, continue. 4. Go to “MAP 1540: Minimum Configuration” on page 50.

Table 3. Firmware Error Codes. (continued)

Error Code	Description	Action / Possible Failing FRU
4B2xxx11	Machine Check - 1 (Stuck Active)	1. Remove processor card in slot 2 (J8) (if installed) and see if the problem is resolved. If problem is resolved, replace processor card. If not, continue. 2. Exchange processor card in slot 1 (J6) with processor card removed from slot 2 (J8) in step 1 (replace processor card if only one processor card exists) and see if the problem is resolved. If problem is resolved, replace processor card. If not, continue. 3. Replace system board.
4B2xxx41	ABIST fail	ABIST fail on first processor in slot identified by location code displayed on operator panel.
4B2xxx42	ABIST fail	ABIST fail on second processor in slot identified by location code displayed on operator panel.
4B2xxx51	LBIST fail	LBIST fail on first processor in slot identified by location code displayed on operator panel.
4B2xxx52	LBIST failed	LBIST failed on second processor in slot identified by location code displayed on operator panel.
4B2xxxC0	CPU internal error (checkstop).	1. If a physical location code is displayed in the operator panel or by AIX diagnostics, replace the FRU as indicated by the location code. If a physical location code is not available, continue. 2. In the service processor menus, go to ″Read Progress Indicators from last System Boot″. If an arrow is pointing to a location code replace the FRU at that location code. If there is no arrow pointing to a location code, continue. 3. Go to “MAP 1540: Minimum Configuration” on page 50.

Table 3. Firmware Error Codes. (continued)

Error Code	Description	Action / Possible Failing FRU
4B2xxxC1	CPU internal cache or cache controller error (checkstop).	1. If a physical location code is displayed in the operator panel or by AIX diagnostics, replace the FRU as indicated by the location code. If a physical location code is not available, continue. 2. In the service processor menus, go to ″Read Progress Indicators from last System Boot″. If an arrow is pointing to a location code replace the FRU at that location code. If there is no arrow pointing to a location code, continue. 3. Go to “MAP 1540: Minimum Configuration” on page 50.
4B2xxxC2	External cache parity or multi-bit ECC error (checkstop).	1. If a physical location code is displayed in the operator panel or by AIX diagnostics, replace the FRU as indicated by the location code. If a physical location code is not available, continue. 2. In the service processor menus, go to ″Read Progress Indicators from last System Boot″. If an arrow is pointing to a location code replace the FRU at that location code. If there is no arrow pointing to a location code, continue. 3. Go to “MAP 1540: Minimum Configuration” on page 50.
4B2xxxC3	External cache ECC single-bit ECC error (checkstop).	1. If a physical location code is displayed in the operator panel or by AIX diagnostics, replace the FRU as indicated by the location code. If a physical location code is not available, continue. 2. In the service processor menus, go to ″Read Progress Indicators from last System Boot″. If an arrow is pointing to a location code replace the FRU at that location code. If there is no arrow pointing to a location code, continue. 3. Go to “MAP 1540: Minimum Configuration” on page 50.

Table 3. Firmware Error Codes. (continued)

Error Code	Description	Action / Possible Failing FRU
4B2xxxC4	System bus time-out error (checkstop).	1. If this error occurs while the system is running, replace the FRU as indicated by the physical location code displayed on the operator panel. 2. If this error occurs while booting, go to “Step 1540-24” on page 68. Otherwise, go to the next step. 3. Check the service processor error log for any possible additional FRUs.
4B2xxxC5	System bus time-out error, waiting for I/O (checkstop).	1. If a physical location code is displayed in the operator panel or by AIX diagnostics, replace the FRU as indicated by the location code. If a physical location code is not available, continue. 2. In the service processor menus, go to ″Read Progress Indicators from last System Boot″. If an arrow is pointing to a location code replace the FRU at that location code. If there is no arrow pointing to a location code, continue. 3. Go to “MAP 1540: Minimum Configuration” on page 50.
4B2xxxC6	System bus parity error (checkstop).	1. If a physical location code is displayed in the operator panel or by AIX diagnostics, replace the FRU as indicated by the location code. If a physical location code is not available, continue. 2. In the service processor menus, go to ″Read Progress Indicators from last System Boot″. If an arrow is pointing to a location code replace the FRU at that location code. If there is no arrow pointing to a location code, continue. 3. Go to “MAP 1540: Minimum Configuration” on page 50.

Table 3. Firmware Error Codes. (continued)

Error Code	Description	Action / Possible Failing FRU
4B2xxxC7	System bus protocol/transfer error (checkstop).	1. If a physical location code is displayed in the operator panel or by AIX diagnostics, replace the FRU as indicated by the location code. If a physical location code is not available, continue. 2. In the service processor menus, go to ″Read Progress Indicators from last System Boot″. If an arrow is pointing to a location code replace the FRU at that location code. If there is no arrow pointing to a location code, continue. 3. Go to “MAP 1540: Minimum Configuration” on page 50.
4B2xxxC8	A generic processor-detected checkstop has occurred.	1. Try to reboot the system in service mode to preserve the AIX error log. Run diagnostics in problem determination mode to determine the cause of the failure if a new SRN or error code is generated, follow the actions for that code. 2. Try to boot AIX diagnostics from CD-ROM. • If the boot is successful, run advanced diagnostics and follow the actions for any SRN or error code that is generated. If the same error code is generated, go to “MAP 1540: Minimum Configuration” on page 50. • If AIX standalone diagnostics do not boot, follow the actions for any new SRN or error code that is generated. If the same error code is generated, go to “MAP 1540: Minimum Configuration” on page 50.
4B20000A	All processors got deconfigured.	1. Replace processor card. 2. Replace system board

Table 3. Firmware Error Codes. (continued)

Error Code	Description	Action / Possible Failing FRU
4B200043	Service processor reports JTAG fail	1. Remove processor card in slot 2 (J8) (if installed) and see if the problem is resolved. If not, proceed to step 2. 2. Exchange processor card in slot 1 (J6) with processor card removed from slot 2 (J8) in step 1 (replace processor card if only one processor card exists) and see if the problem is resolved. If not, proceed to step 3. 3. Replace system board. 4. Replace I/O board. (See note on page 93.)
4B200055	No processor found.	1. If only one processor card is used, it must be in slot 1 (J6). 2. If two processor cards are being used, replace the card in slot 1 (J6).
4B200056	No processor found	1. If only one processor card is used, it must be in slot 1 (J6). 2. If two processor cards are being used, replace the card in slot 1 (J6).
4B200057	The processor cards are not compatible with each other.	1. Remove cards 2. Verify part numbers 3. Install valid cards.
4B200058	Compatibility test on processor card 1 (J6) failed.	1. Remove cards 2. Verify part numbers 3. Install valid cards.
4B200059	Compatibility test on processor card 2 (J8) failed.	1. Remove cards 2. Verify part numbers 3. Install valid cards.
4BA00000	The system support controller detects the service processor, but cannot establish communication. The system halts.	1. Power down the system unit: a. Unplug the power cord. b. Plug in the power cord and power up the system unit. 2. Replace I/O board. (See note 3 on page 93.)
4BA00001	The system support controller cannot detect the service processor.	Replace the I/O board. (See note on page 93.)

Table 3. Firmware Error Codes. (continued)

Error Code	Description	Action / Possible Failing FRU
4BA00800	Unknown error.	1. Check level of service processor firmware; update if necessary. 2. If problem persists, call for support.
4BA00826	Service processor cannot call home.	1. Check modem configuration in service processor menus. 2. Check modem connections. 3. Replace the I/O board. (See note on page 93.)
4BA00827	Flash update diskette fail.	1. Copy the flash update image onto a brand new diskette that has been dos-formatted. 2. The image name on the diskette must be ″spflash.img″. 3. Verify that the flash update image is the correct one for the machine type. 4. Turn ac power off, then on, and retry flash update. 5. Replace diskette drive.
4BA00828	Flash update (crc) checksum fail.	Copy the flash image onto a new, dos-formatted diskette and retry the flash update.
4BA00829	Bad system firmware.	Replace the I/O board. (See note on page 93.)
4BA00830	Boot fail.	Go to “Boot Problems/Concerns” on page 89.
4BA00831	Bad service processor firmware image.	1. Unplug the machine from ac power, wait a few moments, and attempt to reboot. Pay close attention to the progress code the machine hangs on (if it does hang on one) and refer to description of that progress code . 2. Replace the I/O board. (See note on page 93.)
4BA00832	Error while doing flash update.	1. Re-power the system; retry the flash programming a few times. 2. Replace I/O board. (See note on page 93.)
4BA10001	SSC SRAM fail	1. Restore or update the service processor flash EPROM. 2. Replace I/O board. (See note on page 93.)
4BA10002	SSC SRAM fail.	1. Go to “MAP 1540: Minimum Configuration” on page 50. 2. Replace I/O board. (See note on page 93.)

Table 3. Firmware Error Codes. (continued)

Error Code	Description	Action / Possible Failing FRU
4BA10003	Service processor hardware fail.	Replace I/O board. (See note on page 93.)
4BA10004	Service processor firmware fail.	1. Restore or update the service processor firmware. 2. Replace I/O board. (See note on page 93.)
4BA10005	Path fail	1. Replace I/O board. (See note on page 93.) 2. Replace processor card. 3. Replace system board.
4BA10832	Error while doing flash update.	1. Power-on the system unit. 2. Do the following flash recovery procedure: a. Insert a newly formatted DOS diskette loaded with service processor firmware into the diskette drive. The file name must be *spflash.img*. b. Shutdown the system unit and unplug the power cable. c. Plug in the power cable, power-on the system unit. 3. Retry item 2 with a newly formatted DOS diskette. 4. Go to “MAP 1540: Minimum Configuration” on page 50.
4BA80013	NVRAM	1. Unplug the system unit. Manually clear NVRAM. Remove the battery and use it to short the battery leads for at least 30 seconds. Power-up the system unit. 2. Go to “MAP 1540: Minimum Configuration” on page 50.
4BA80014	NVRAM checksum (CRC) fail.	1. Unplug the system unit. Manually clear NVRAM. Remove the battery and use it to short the battery leads for at least 30 seconds. Power-up the system unit. 2. Go to “MAP 1540: Minimum Configuration” on page 50.
4BA80015	NVRAM reinitialization fail.	1. Unplug the system unit. Manually clear NVRAM. Remove the battery and use it to short the battery leads for at least 30 seconds. Power-up the system unit. 2. Go to “MAP 1540: Minimum Configuration” on page 50.

Memory Problem Determination Bits

The following table expands the firmware error code **25Cyyxxx** on page 102, where **yy** is the PD values in the table below and xxx are the last three digits of the error code. Use these values to identify the type of memory that generated the error.

If you replace FRUs and the problem is still not corrected, go to "MAP 1540: Minimum Configuration" on page 50 unless otherwise indicated in the tables.

Table 4. Memory Module PD bits

PD value	Size	Clock Cycle (nsecs)	Parity/ ECC
28	512 MB	10	ECC
2A	512 MB	8	ECC
38	128 MB	10	ECC
3A	128 MB	8	ECC
48	64 MB	10	ECC
4A	64 MB	8	ECC
58	32 MB	10	ECC
5A	32 MB	8	ECC
68	256 MB	10	ECC
6A	256 MB	8	ECC

Note: Memory modules must be installed in pairs.

Bus SRN to FRU Reference Table

This table is used to locate defective FRUs within the I/O board's PCI and ISA buses. The table indicates which devices should be tested for each SRN. For this procedure, if possible, diagnostics are run on the I/O board bus devices with all adapters removed from the failing bus. If a failure is detected on this system with all adapters removed from the failing bus, the I/O board is the isolated FRU. If a failure is not detected, the adapters are added back one at a time to their original slot location, and the configuration is tested until a failure is detected. The failure is then isolated to the failing FRU.

If a failure has not been detected and all the FRUs have been tested, call technical service support for assistance.

Table 5. Bus SRN to FRU Reference Table

SRN	Bus Identification	Possible Failing Device and AIX Location Code	Associated FRU
9CC-100	PCI Bus 00	Internal SCSI port (10-60)	I/O board. (See note on page 93.)
		External SCSI port (10-88)	I/O board. (See note on page 93.)
		Internal Ethernet port (10-80)	I/O board. (See note on page 93.)
		Device installed in I/O slot 3P (10-68 to 10-6F)	Adapter
		Device installed in I/O slot 4P (10-70 to 10-77)	Adapter
		Device installed in I/O slot 5P (10-78 to 10-7F)	Adapter
9CC-101	PCI Bus 40	Device installed in I/O slot 1P (20-58 to 20-5F)	Adapter
		Device installed in I/O slot 2P (20-60 to 20-67)	Adapter
651-730	ISA Bus	Diskette drive port/device (01-D1-00-00)	I/O board. (See note on page 93.)
		Parallel port/device (01-R1)	I/O board. (See note on page 93.)
		Serial ports (1-2)/device (01-S1 to 01-S2)	I/O board. (See note on page 93.)
		Mouse port/device (01-K1-01-00)	I/O board. (See note on page 93.)
		Keyboard port/device (01-K1-00-00)	I/O board. (See note on page 93.)
		Audio port/device (01-Q2)	I/O board. (See note on page 93.)
		Tablet port/device (01-Q1)	I/O board. (See note on page 93.)

Typical Boot Sequence

After the ac power is turned on, the System Support Controller (SSC) startup begins the service processor. If the SSC cannot communicate with the service processor, the LCD displays 4BA00000. If the service processor is not present, the LCD displays 4BA00001.

1. Service processor self-test
   - Service processor card performs self-test and NVRAM initialization.
   - LCD code range is E000 - E07F.
   - LCD code is OK when complete.
2. Service processor in standby mode
   - You can enter the service processor menus whenever the LCD code is OK, STBY, or has an eight-digit error code on the LCD display, by pressing the Enter key on an ASCII terminal connected to serial port 1.
3. Built-In-Self-Test (BIST)
   - The service processor initiates built-in-self-test (BIST) on the central electronics complex (CEC) chips when the Power button is pressed.
   - The VPD data are read and the CRC is checked.
   - The processor compatibility test is run.
   - LCD code range is E0A0 - E0E1.
4. System Initialization
   - System firmware begins to execute and initializes system registers after LCD code E0E1.
   - LCD code range is E1XX - E2XX.
5. Memory Test
   - The system firmware tests the system memory and identifies failing memory cards and memory module locations.
   - LCD code range is E3XX.
6. Device Configuration and Test
   - System firmware checks to see which devices are in the system and performs a simple test on them.
   - The system firmware displays the device name or device icon being tested. After the keyboard name or icon appears, the user can enter the System Management Services menu by pressing the 1 key (if ASCII terminal) or the F1 key (if graphics terminal).
   - The user can also enter one of the following:
     – 5 or F5 to start the standalone diagnostics (CD).
     – 6 or F6 to start the online diagnostics (disk drive).
   - IPL Boot Code
     – The system firmware attempts to boot from the devices listed in the boot list.
     – LCD code range is E1XX.
   - Boot Image Execution

  - After a boot image is located on a device in the boot list, the system firmware code passes control to one of the following AIX Boot codes:
    - LCD code E105 for normal boot
    - LCD code E15B for service mode boot.
  - The AIX boot code displays LCD progress codes in the format 0XXX.
- AIX boot complete
  - The AIX login prompt displays on the main console.

Chapter 6. Loading the System Diagnostics

The system diagnostics can be booted either the default boot list or the customized service mode boot list. (The service mode boot list can be modified using the system diagnostics ″Display or Change Bootlist″ service aid. The service mode boot list cannot be modified under the System Management Services.)

Performing Slow Boot

To fully analyze all of the available information, perform the following steps before doing a hardware repair or replacement, especially if the error is related to the CPU or memory.

1. Record the 8-character error code (and location code if present) displayed in the operator panel, or that was reported by the customer.
2. Do a slow-mode boot in service mode. This can be specified using the System Power Control Menu on the service processor main menu. (A fast-mode boot skips much of the built-in diagnostic testing.) A slow-mode boot may yield a new 8-character error code on the operator panel and new errors in the service processor error log. If a new error code is reported, use it in subsequent steps to continue problem analysis.

Standalone Diagnostics

To load standalone diagnostics from the default boot list, perform the following procedure:

1. Verify with the system administrator and users that all programs may be stopped, then do so.
2. Turn off the system.
3. Wait 30 seconds, and turn on the system.
4. Immediately insert the diagnostic CD-ROM into the CD-ROM drive.
5. When or after the keyboard indicator appears during startup, press the F5 key on a directly attached keyboard (or the number 5 key on an ASCII terminal).
6. Enter any requested passwords.

Online Diagnostics

Online diagnostics can be loaded using the customized service mode boot list by pressing the F6 key (on a directly attached keyboard) or the number 6 key on an ASCII terminal.

The procedure for booting from the devices listed in the service mode boot list (**Online Diagnostics**) is as follows:

1. Verify with the system administrator and users that all programs may be stopped, then do so.
2. Turn off the system.

3. Wait 30 seconds, and turn on the system.
4. When or after the keyboard indicator appears during startup, press the F6 key on a directly attached keyboard (or the number 6 key on an ASCII terminal).
5. Enter any requested passwords.

After any requested passwords have been entered, the system attempts to boot from the first device of each type found on the list. If no bootable image is found on the first device of each type on the list, the system does not search through the other devices of that type for a bootable image. Instead, it polls the first device of the next type.

If all types of devices in the boot list have been polled without finding a bootable image, the system restarts, giving the user the opportunity to start the System Management Services (by pressing the F1 key on a directly attached keyboard or the number 1 on an ASCII terminal) before the system attempts to boot again.

Default Boot List and Service Mode Boot List

The default boot list is as follows:

1. Diskette drive
2. CD-ROM drive
3. Tape drive
4. Disk drive
5. Network adapter
   - Token-ring
   - Ethernet

Pressing the F5 key on a directly attached keyboard (or the number 5 key on an ASCII terminal) causes the system to load standalone diagnostics provided that a diagnostic CD is present in the CD-ROM drive.

Pressing the F6 key on a directly attached keyboard (or number 6 key on an ASCII terminal) loads online diagnostics using the service mode boot list. No diagnostic CD should be in the CD-ROM drive because online diagnostics is typically run from a hard disk, which is in the service mode boot list defined by using the system diagnostics ″Display or Change Bootlist″ service aid. Like the default boot list, the service mode boot list can contain five entries. The F6 and 6 keys work like the F5 and 5 keys, with the following exceptions:

- The system searches for a boot record according to the service mode boot list.
- If the service mode boot list is discovered by a cyclical redundancy check to be corrupted, the system rebuilds the service mode boot list according to the default boot list. (The default boot list contains five entries, and for each matching device type found in the system unit, the system makes an entry in the service mode boot list.)
- If no service mode boot list is present, the system uses the default boot list.

Chapter 7. Using the Service Processor

The service processor menus enable you to configure service processor options and to enable and disable functions.

Service processor menus are available using an ASCII terminal when the server is turned off and the service processor is operating with standby power. Service processor menus are also available when server power is on and the service processor has detected a server problem (such as loss of surveillance).

During the first power-up (that is, the power cord is plugged into the outlet), service processor menus are not available for 45 seconds while the service processor is running self-tests and initializing the server. If the server powers down, service processor menus become available after 15 seconds.

For a summary of the service processor functions and the methods for invoking them, see the table below.

Service Processor Functions	Service Processor Menus (ASCII terminals)	AIX Service Aids (ASCII or graphics terminals)	SMS (ASCII or graphics terminals)
View System Environmental Conditions	Y[3]		
Read System POST Errors	Y[3]		
Read Service Processor Error Logs	Y[3]		
View Progress Indicators from last Boot	Y[3]		
Power-on System	Y[3]		
Power-off System	Y[2]		
Read NVRAM	Y[2]		
Reset Service Processor	Y[2]		
Setup Reboot/Restart Policy	Y[2]		
Start Talk Mode	Y[2]		
Enable/Disable Console Mirroring	Y[2]	Y[1]	
Select Modem Line Speed	Y[2]	Y[1]	
Enable/Disable Modem	Y[2]	Y[1]	
Setup Modem Configuration	Y[2]	Y[1]	
Setup Ring Indicate Power-On	Y[2]	Y[1]	
Setup Dial-out Phone Numbers	Y[2]	Y[1]	
Setup Surveillance	Y[2]	Y[1]	
Update Service Processor Flash EPROM	Y[2]	Y[1]	Y[2]
Change General-Access Password	Y[2]		Y[2]
Change Privileged-access Password	Y[2]		Y[2]
Select Language	Y[2]		Y[2]
Enable/Disable Unattended Start Mode	Y[2]		Y[2]

[1] Operating system root password

[2] Privileged-access password

[3] General-access (power-on) password

Service Processor Menus

The service processor menus are divided into two groups:

- General user menus - the user must know the general-access password.
- Privileged user menus - the user must know the privileged-access password.

The following section describes these two groups of menus, how to access them, and the functions associated with each option.

When the server is powered down, the service processor menus can be accessed locally or remotely.

Service Processor Menu Inactivity

To prevent loss of control in unstable power environments, the service processor leaves the menu mode after five minutes of inactivity. Return to the menus by pressing any key on the local or remote terminal.

Accessing Service Processor Menus Locally

Service processor menus can be accessed locally by connecting an ASCII terminal to either serial port. Because the presence of the ASCII terminal cannot be confirmed by the service processor, you must press a key on the ASCII terminal to confirm its presence after OK appears in the operator panel display. The service processor then prompts you for a password (if set), and when verified, displays the service processor menus.

Accessing Service Processor Menus Remotely

Service processor menus can be accessed remotely by connecting a modem to serial port 1 or serial port 2, as follows:

1. Turn off the server, unplug the power cord, and press the Power button to drain capacitance while power is disconnected.
2. Connect the modem to the appropriate serial port and turn on the modem.
3. Plug in the server.

Note:

If your modem has not been configured, go to “Call-In/Call-Out Setup Menu” on page 167, and with a terminal or terminal emulator, call the server’s modem.

The service processor prompts you for a password (if set), and when verified, displays the service processor menus.

General User Menu

The menu options presented to the general user are a subset of the options available to the privileged user. The user must know the general-access password, if set, to access these menus.

```
        GENERAL USER MENU

   1. Power-On System
   2. Read VPD Image from Last System Boot
   3. Read Progress Indicators from Last System Boot
   4. Read Service Processor Error Logs
   5. Read System POST Errors
   6. View System Environmental Conditions
  99. Exit from Menus

1>
```

Note: The service processor prompt displays either 1> or 2> to indicate which serial port on the system unit is being used to communicate with the service processor.

- **Power-On System**

  Allows the user to power-on the system.

- **Read VPD Image from Last System Boot**

  Displays manufacturer vial product data, such as serial numbers, part numbers, and so on, that were stored from the system boot prior to the one in progress now.

- **Read Progress Indicators from Last System Boot**

  Displays the boot progress indicators (checkpoints), up to a maximum of 100, from the system boot prior to the one in progress. This historical information can be useful to help diagnose system faults.

  The progress indicators are displayed in two sections. Above the dashed line are the progress indicators (latest) from the boot that produced the current sessions. Below the dashed line are progress indicators (oldest) from the boot preceding the one that produced the current sessions.

  The progress indicator codes are listed from top (latest) to bottom (oldest). The dashed line represents the point where the latest boot started.

  If the <-- arrow occurs, use the 4-digit checkpoint or 8-digit error code being pointed to as the starting point for your service actions.

- **Read Service Processor Error Logs**

  Displays the service processor error logs.

  The time stamp in this error log is coordinated universal time (CUT), also known as Greenwich Mean Time (GMT). AIX error logs have additional information available and are able to time stamp the errors with local time. See “Error Log” on page 200 for an example of the error log.

- **Read System POST Errors**

  Select this item to review the results of the POST (power-on self-test). Your server may be able to start in the presence of POST errors if there are sufficient working system resources. If POST errors occur during startup, this error log, when used with the diagnostics, helps to isolate faults. See “System POST Errors” on page 182 for an example of the POST error screen.
- **View System Environmental Conditions**

  With this menu option, the service processor reads all environmental sensors and reports the results to the user. This option can be useful when surveillance fails, because it allows the user to determine the environmental conditions that may be related to the failure.

Privileged User Menus

The following menus are available to privileged users only. The user must know the privileged-access password, if set, to access these menus.

Main Menu

At the top of the Main Menu is a listing containing:

- Your service processor’s current firmware version
- The firmware copyright notice
- The system name given to your server during setup (optional)

You need the firmware version for reference when you either update or repair the functions of your service processor.

The system name, an optional field, is the name that your server reports in problem messages. This name helps your support team (for example, your system administrator, network administrator, or service representative) to more quickly identify the location, configuration, and history of your server. The system name is set from the Main Menu using option 6.

Note: The information under the Service Processor Firmware heading in the following Main Menu illustration is example information only.

```
                Service Processor Firmware
                 Firmware Level: sh991029
               Copyright 1997, IBM Corporation
                   SYSTEM NAME


        MAIN MENU

   1. Service Processor Setup Menu
   2. System Power Control Menu
   3. System Information Menu
   4. Language Selection Menu
   5. Call-In/Call-Out Setup Menu
   6. Set System Name
  99. Exit from Menus

1>
```

Service Processor Setup Menu

The Service Processor Setup menu shown below is accessed from the Main Menu:

```
      SERVICE PROCESSOR SETUP MENU

   1. Change Privileged-access Password
   2. Change General-Access Password
   3. Enable/Disable Console Mirroring:
        Currently Disabled

   4. Start Talk Mode
   5. OS Surveillance Setup Menu
   6. Reset Service Processor
   7. Reprogram Service Processor Flash EPROM
   8. Serial Port Snoop Setup Menu
  98. Return to Previous Menu
  99. Exit from Menus

1>
```

Note: Unless otherwise stated in the menu responses, setings become effective when a menu is exited using option 98 or 99.

Passwords

Passwords can be any combination of up to eight alphanumeric characters. You can enter longer passwords, but the entries are truncated to include only the first eight characters. Passwords can be set from the service processor menu or from the System Management Services menus.

For security purposes, the service processor counts the number of attempts to enter correct passwords. The results of not recognizing a correct password within this error threshold are different, depending on whether the attempts are being made locally (at the server) or remotely (through a modem). The error threshold is three attempts.

If the error threshold is reached by someone entering passwords at the server, the service processor exits the menus. This action is taken based on the assumption that the server is in an adequately secure location with only authorized users having access. Such users must still successfully enter a login password to access AIX.

If the error threshold is reached by someone entering passwords remotely, the service processor disconnects the modem to prevent potential security attacks on the server by unauthorized remote users.

The following table illustrates what you can access with the privileged-access password and the general-access password.

Privileged-Access Password	General-Access Password	Resulting Menu
None	None	MAIN MENU displays
None	Set	MAIN MENU displays
Set	None	Users with password see the MAIN MENU. Other users see the GENERAL USER MENU.
Set	Set	Users see menus associated with the entered password

- **Change Privileged-access Password**

  Set or change the privileged-access password. It provides the user with the capability to access all service processor functions. This password is usually used by the system administrator or root user.
- **Change General-Access Password**

  Set or change the general-access password. It provides limited access to service processor menus and is usually available to all users who are allowed to power on the server.
- **Enable/Disable Console Mirroring**

  When console mirroring is enabled, the service processor sends information to both serial ports. This capability, which can be enabled by local or remote users, provides local users with the capability to monitor remote sessions. Console mirroring can be enabled for the current session only. For more information, see “Console Mirroring” on page 181.
- **Start Talk Mode**

In a console-mirroring session, it is useful for those who are monitoring the session to be able to communicate with each other. Selecting this menu item activates the keyboards and displays for such communications while console mirroring is established. This is a full duplex link, so message interference is possible. Alternating messages between users works best.

- **OS Surveillance Setup Menu**

This menu can be used to set up operating system (OS) surveillance.

```
       OS Surveillance Setup Menu

 1. Surveillance:
     Currently Enabled

 2. Surveillance Time Interval:
     5 Minutes

 3. Surveillance Delay:
      10 Minutes


98. Return to Previous Menu
```

- **Surveillance**

  Can be set to enabled or disabled.
- **Surveillance Time Interval**

  Can be set to any number from 1 to 255 minutes. The default value is 5 minutes.
- **Surveillance Delay**

  Can be set to any number from 0 to 255 minutes. The default value is 10 minutes.

Surveillance time interval and surveillance delay can only be changed after surveillance is enabled.

Refer to “Service Processor System Monitoring - Surveillance” on page 179 for more information about surveillance.

- **Reset Service Processor**

  Allows the user to reinitialize the service processor.
- **Reprogram Service Processor Flash EPROM**

  Attention: Only the service processor firmware can be updated from the service processor menus; the system firmware cannot be updated from the service processor menus. A service processor firmware update always requires a companion system firmware update which must be applied first. For this reason, updating only the service processor firmware using the service processor menus is not recommended. Go to the RS/6000 support web site at http://www.rs6000.ibm.com/support/micro to download the latest firmware levels and update instructions.

  The service processor firmware update image must be written onto a DOS-formatted diskette. The update image can be obtained from the RS/6000 support web site: http://www.rs6000.ibm.com/support/micro.

  After the update diskette has been made, from the service processor main menu, select ″Service Processor Setup″. Then select ″Reprogram Service Processor Flash EPROM″. The program requests the update diskette(s) as they are needed. The service processor will automatically reboot after the firmware update is complete.

Serial Port Snoop Setup Menu

This menu can be used to setup serial port snooping, in which the user can configure serial port 1 as a ″catch-all″ reset device.

From the main service processor menu, select option 1, Service Processor Setup, then select option 8 (Serial Port Snoop Setup Menu).

```
        SERIAL PORT SNOOP SETUP MENU

   1. System reset string:
        Currently Unassigned

   2. Snoop Serial Port:
       Currently Unassigned

  98. Return to Previous Menu

1>
```

Use the system reset string option to enter the system reset string, which resets the machine when it is detected on the main console on serial port 1.

Use the snoop serial port option to select the serial port to snoop.

Note: Only serial port 1 is supported.

After serial port snooping is correctly configured, at any point after the system unit is booted to AIX, whenever the reset string is typed on the main console, the system unit uses the service processor reboot policy to restart. This action causes an EPOW (Early Power Off Warning) to be logged, and also an AIX dump to be created if the machine is at an AIX prompt, with AIX in such a state that it can respond. If AIX cannot respond, the EPOW record is created, rather than the AIX dump.

Pressing Enter after the reset string is not required, so make sure that the string is not common or trivial. A mixed-case string is recommended.

System Power Control Menu

The menu is used to set power control options.

```
        SYSTEM POWER CONTROL MENU

  1. Enable/Disable Unattended Start Mode:
       Currently Disabled
  2. Ring Indicate Power-On Menu
  3. Reboot/Restart Policy Setup Menu
  4. Power-On System
  5. Power-Off System
  6. Enable/Disable Fast System Boot:
       Currently Disabled
  7. Boot Mode Menu
 98. Return to Previous Menu
 99. Exit from Menus

1>
```

- **Enable/Disable Unattended Start Mode**

  Use this option to instruct the service processor to immediately power-on the server after a power failure, bypassing power-on password verification. Unattended start mode can also be set using SMS menus. Unattended start mode can be used on servers that require automatic power-on after a power failure.

- **Ring Indicate Power-On Menu**

  Ring indicate power-on is an alternate method of dialing in without establishing a service processor session. If the system is powered off and ring indicate power-on is enabled, the server is powered on at the predetermined number of rings. If the server is already on, no action is taken. In either case, the telephone call is not answered. The caller receives no feedback that the server is powered on. The **Ring Indicate Power-On Menu** and defaults are shown below:

```
        Ring Indicate Power-On Menu

  1. Ring indicate power-on:
       Currently Disabled

  2. Number of rings:
       Currently 6

 98. Return to Previous Menu
```

  The number of rings can be set to any number greater than zero. The default value is six rings.

- **Reboot/Restart Policy Setup Menu**

  Reboot describes bringing the system hardware back up from scratch, for example, from a system reset or power-on. The reboot process ends when control passes to the operating system loading (or initialization) process.

  Restart describes activating the operating system after the system hardware reinitialized. Restart must follow a successful reboot.

```
        Reboot/Restart Policy Setup Menu

   1. Number of reboot attempts:
        Currently 3

   2. Use OS-Defined restart policy?
        Currently Yes

   3. Enable supplemental restart policy?
        Currently No

   4. Call-Out before restart:
        Currently Disabled

  98. Return to Previous Menu

1>
```

  – **Number of reboot attempts** If the server fails to successfully complete the boot process, it attempts to reboot the number of times specified. Values equal to or greater than 0 are valid. Only successive failed reboot attempts count, not reboots that occur after a restart attempt. At restart, the counter is set to 0.

  – **Use OS-Defined restart policy** lets the service processor react or not react the same way as the operating system to major system faults by reading the setting of the operating system parameter **Automatically Restart/Reboot After a System Crash**. This parameter may or may not be defined, depending on the operating system or its version and level. If the operating system automatic restart setting is defined, then it can be set to respond to a major fault by restarting or by not restarting. See your operating system documentation for details on setting up operating system automatic restarts. The default value is Yes.

  – **Enable supplemental restart policy** - The default setting is No. If set to Yes, the service processor restarts the system when the system loses control as detected by the service processor surveillance, and either:

    - The **Use OS-Defined restart policy** is set to No

    OR

    - The **Use OS-Defined restart policy** is set to Yes, and the operating system has NO automatic restart policy.

      Refer to “Service Processor Reboot/Restart Recovery” on page 176.

  – **Call-Out before restart** If a restart is necessary due to a system fault, you can enable the service processor to call out and report the event. This option can be valuable if the number of these events becomes excessive, signalling a bigger problem.

The following table describes the relationship among the operating system and service processor restart controls:

OS Automatic Reboot/Restart AfterCrash Setting	Service Processor to Use OS-Defined Restart Policy?	Service Processor Enable Supplemental Restart Policy?	System Response
None	No	No[1]	
None	No	Yes	Restarts
None	Yes[1]	No[1]	
None	Yes[1]	Yes	Restarts
False[2]	No	No[1]	
False[2]	No	Yes	Restarts
False[2]	Yes[1]	No[1]	
False[2]	Yes[1]	Yes	
True	No	No[1]	
True	No	Yes	Restarts
True	Yes[1]	No[1]	Restarts
True	Yes[1]	Yes	Restarts

[1] Service processor default

[2] AIX default

- **Power-On System**

  Allows immediate power-on of the system. For other power-on methods, see “System Power-On Methods” on page 175.

- **Power-Off System**

  Allows the user to power-off the server following a surveillance failure.

- **Enable/Disable Fast System Boot**

  Allows the user to select a fast system boot.

  Attention: Enabling fast system boot results in several diagnostic tests being skipped and a shorter memory test being run.

- **Boot Mode Menu**

  Allows users to configure the system to automatically start a specific function on the next system start. This configuration applies to the next boot only and is reset to the default state of being disabled following a successful boot attempt.

```
        BOOT MODE MENU

   1. Boot to SMS Menu:
        Currently Disabled

   2. Service Mode Boot from Saved List:
      Currently Disabled

   3. Service Mode Boot from Default List:
      Currently Disabled

   4. Boot to Open Firmware Prompt:
        Currently Disabled

  98. Return to Previous Menu

1>
```

  – **Enabling the Boot to SMS Menu option**

    Causes the system to automatically enter the System Management Services menu during the boot process. Enabling this option is equivalent to pressing 1 on the attached ASCII terminal (or F1 on a graphics terminal) while the system initialization indicators display on screen.

  – **Enabling the Service Mode Boot from Saved list option**

    Causes the system to automatically enter the stand-alone diagnostics (see “Standalone Diagnostics” on page 147 for more information about stand-alone diagnostics). Enabling this option is equivalent to pressing 5 on the attached ASCII terminal (or F5 on a graphics terminal) while the system initialization indicators display on screen.

  – **Enabling the Service Mode Boot from Default List option**

    Causes the system to automatically enter the online diagnostics in service mode (see “Online Diagnostics” on page 147 for more information about online diagnostics). Enabling this option is equivalent to pressing 6 on the attached ASCII terminal (or F6 on a graphics terminal) while the system initialization indicators display on screen.

  – **Enabling the Boot to Open Firmware Prompt option**

    Causes the system to automatically enter open firmware prompt (also called the OK prompt). Enabling this option is equivalent to pressing 8 on the attached ASCII terminal (or F8 on a graphics terminal) while the system initialization indicators display on screen (see “Open Firmware” on page 222 for more information about the open firmware prompt).

If more than one option is enabled, the system recognizes only the option corresponding to the smallest menu number. For example, if options 4 and 2 were enabled, the system recognizes only Option 2: Service Mode Boot from Saved List. After a boot attempt, all enabled options are disabled. In effect, the system throws away any menu options that are enabled after the option with the highest priority (the option with the smallest menu number) is executed.

The user can also override the choices in the Boot Mode Menu while the system initialization indicators display on the screen. For example, if the user had enabled the system to enter the SMS menus (option 1) but pressed the 8 key while the system initialization indicators displayed on the screen, the system would enter the open firmware prompt and disregards the settings in the Boot Mode Menu.

System Information Menu

Use this menu to view the processor configuration information, error logs, system resources, and processor configuration.

```
        SYSTEM INFORMATION MENU

   1. Read VPD Image From Last System Boot
   2. Read Progress Indicators From Last System Boot
   3. Read Service Processor Error Logs
   4. Read System POST Errors
   5. Read NVRAM
   6. Read Service Processor Configuration
   7. View System Environmental Conditions
   8. Processor Configuration/Deconfiguration Menu
   8. Memory Configuration/Deconfiguration Menu
   10. Enable/Disable CPU Repeat Gard
       Currently Enabled

   11. Enable/Disable MEM Repeat Gard
       Currently Enabled

  98. Return to Previous Menu
  99. Exit from Menus

1>
```

- **Read VPD Image from last system boot**

  Displays manufacture's vital product data (VPD), such as serial numbers, part numbers, and so on, that were stored from the system the boot prior to the one in progress now.

- **Read Progress Indicators from Last System Boot**

  Displays the boot progress indicators (checkpoints), up to a maximum of 100, from the system boot prior to the one in progress. This historical information can help to diagnose system faults.

  The progress indicators are displayed in two sections. Above the dashed line are the progress indicators (latest) from the boot that produced the current sessions. Below the dashed line are progress indicators (oldest) from the boot preceding the one that produced the current sessions.

  The progress indicator codes are listed from top (latest) to bottom (oldest). If the <--- arrow occurs, use the 4-digit checkpoint or 8-character error code being pointed to as the beginning of your service actions.

- **Read Service Processor Error Logs**

  Displays error conditions detected by the service processor.

  The time stamp in this error log is Coordinated Universal Time (CUT), also known as Greenwich Mean Time (GMT). AIX error logs have additional information available and are able to time stamp the errors with the local time. See "Error Log" on page 200 for an example of the error log.

- **Read System POST Errors**

  Select this option to review the results of the POST (power-on self-test). Your system unit may be able to start in the presence of POST errors if there are sufficient working system resources. If POST errors occur during start up, this error log, when used with the diagnostics, helps to isolate faults. See page “System POST Errors” on page 182 for an example of the POST error screen.
- **Read NVRAM**

  Displays nonvolatile random access memory (NVRAM) contents.
- **Read Service Processor Configuration**

  Displays all service processor settings that can be changed by the user.
- **View System Environmental Conditions**

  The service processor reads all environmental sensors and reports the results to the user. Use this option when surveillance fails, because it allows the user to determine the environmental conditions that may be related to the failure.
- **Processor Configuration/Deconfiguration Menu**

  Use this option to view the processor configuration.

  The following is an example of the Processor Configuration/Deconfiguration Menu:

```
    Processor Configuration/Deconfiguration Menu

Processor number
 0. Configured by system (0x0)
 1. Configured by system (0x0)
 2. Configured by system (0x0)
 3. Configured by system (0x0)
 98. Return to Previous Menu

To change the configuration, select the processor number
1>
```

  The processor can be in one of four states:

  – **Configured by system:** The system processor is present, and has not exceeded the failure threshold.
  – **Deconfigured by system:** The system processor has been taken off-line by the service processor due to an unrecoverable error, or recoverable errors exceeding the failure threshold.
  – **Manually configured :** The processor is present and available. It has been configured by the user through the service processor menus.
  – **Manually deconfigured :**The processor is present, but unavailable. It has been deconfigured by the user through the service processor menus.
- **Memory Configuration/Deconfiguration Menu**:

  Use this menu to view and modify the memory DIMM configuration. If it is necessary to take one of the memory DIMMs off-line, this menu allows you to deconfigure a DIMM and then reconfigure the DIMM at a later time.

  The configuration process takes place during system power-up. Therefore, the configuration displayed by this menu in standby mode reflects the configuration during the last boot.

The following is an example of the Memory Configuration/Deconfiguration Menu.

```
    Memory Configuration/Deconfiguration Menu

DIMMs on memory card number 0:

DIMMs on memory card number 1:
 1. Configured by system (0x0)          2. Configured by system (0x0)

98. Return to Previous Menu

Enter card number _and_ DIMM number separated by a space
1>
```

When the user selects a DIMM, its state toggles between configured and deconfigured. Memory DIMMs that are not present are not shown.

Each memory DIMM can be in one of four states:

- **Configured by system:** The memory DIMM is present, and has not exceeded the failure threshold. It has been configured by the system and is available.
- **Deconfigured by system:** The memory DIMM is present, but has exceeded the failure threshold. It has been deconfigured by the system and is currently unavailable.
- **Manually configured:** The memory DIMM is present and available. It has been configured by the user through this menu.
- **Manually deconfigured:** The memory DIMM is present, but unavailable. It has been deconfigured by the user through this menu.

- **Enable/Disable CPU Repeat Gard Menu**

  Use this option to enable or disable cpu repeat gard.

- **Enable/Disable Memory Repeat Gard Menu**

  Use this option to enable or disable memory repeat gard.

Language Selection Menu

The service processor menus and messages are available in different languages. This menu allows selecting languages into which service processor and system firmware menus and messages are displayed.

```
        LANGUAGE SELECTION MENU

   1. English
   2. Francais
   3. Deutsch
   4. Italiano
   5. Espanol
   6. Svenska
  98. Return to Previous Menu
  99. Exit from Menus

1>
```

Note: Your ASCII terminal must support the ISO-8859 character set to correctly display languages other than English.

Call-In/Call-Out Setup Menu

This menu is used to configure a modem for the service processor to use to support the system.

```
        CALL-IN/CALL-OUT SETUP MENU

   1. Modem Configuration Menu
   2. Serial Port Selection Menu
   3. Serial Port Speed Setup Menu
   4. Telephone Number Setup Menu
   5. Call-Out Policy Setup Menu
   6. Customer Account Setup Menu
   7. Call-Out Test
   8. Ring Indicate Power-On Menu
  98. Return to Previous Menu
  99. Exit from Menus

1>
```

- **Modem Configuration Menu**, see “Modem Configuration Menu” on page 168.
- **Serial Port Selection Menu**, see “Serial Port Selection Menu” on page 168.
- **Serial Port Speed Setup Menu**, see “Serial Port Selection Menu” on page 168.
- **Telephone Number Setup Menu**, see “Telephone Number Setup Menu” on page 169.
- **Call-Out Policy Setup Menu**, see “Call-Out Policy Setup Menu” on page 171.
- **Customer Account Setup Menu**, see “Customer Account Setup Menu” on page 172.
- **Call-out Test**, see “Call-Out Policy Setup Menu” on page 171.
- **Ring Indicate Power-On Menu**, see 159.

Modem Configuration Menu

Two entries at the top of the Modem Configuration Menu display the status of the current selections. Selections are made in the two sections labeled Modem Ports and Modem Configuration File Name. Select the serial port that you want to activate and then select the modem configuration file for the modem on the port. To set up both serial ports with modems, make your selections one port at a time.

For information on choosing a modem configuration file, see “Sample Modem Configuration Files” on page 293 and “Transfer of a Modem Session” on page 297.

```
        Modem Configuration Menu

   Port 1 Modem Configuration File Name:
   Port 2 Modem Configuration File Name:

To make changes, First select the port and then the configuration file
name

Modem Ports:
   1. Serial port 1
   2. Serial port 2

Modem Configuration File Name:
   3. none                  9. modem_m0_sp
   4. modem_f_sp            10. modem_m1_sp
   5. modem_f0_sp
   6. modem_f1_sp
   7. modem_z_sp
   8. modem_z0_sp

   30. Save configuration to NVRAM and Configure modem
   98. Return to Previous Menu
```

Serial Port Selection Menu

This menu allows you to enable and/or disable the call-in functions of each serial port in any combination.

```
      Serial Port Selection Menu

   1. Serial Port 1 Call-Out:
       Currently Disabled

   2. Serial Port 2 Call-Out:
       Currently Disabled

   3. Serial Port 1 Call-In:
       Currently Disabled

   4. Serial Port 2 Call-In:
       Currently Disabled

   98. Return to Previous Menu
```

Serial Port Speed Setup Menu

This menu allows you to set serial port speed to enhance terminal performance or to accommodate modem capabilities.

```
        Serial Port Speed Setup Menu

   1. Serial port 1 speed:
         Currently 9600

   2. Serial port 2 speed:
         Currently 9600

  98. Return to Previous Menu
```

A speed of 9600 baud or higher is recommended. Valid serial port speeds are shown below:

50	600	4800
75	1200	7200
110	2000	9600
134	2400	19200
150	2400	57600
300	3600	115200

Telephone Number Setup Menu

Use the menu to set or change the telephone numbers for reporting a system failure.

```
          Telephone Number Setup Menu

   1. Service Center Telephone Number:
       Currently Unassigned

   2. Customer Administration Center Telephone Number:
       Currently Unassigned

   3. Digital Pager Telephone Number:
       Currently Unassigned

   4. Customer Voice Telephone Number:
       Currently Unassigned

   5. Customer System Telephone Number:
       Currently Unassigned

  98. Return to Previous Menu

1>
```

- **Service Center Telephone Number** is the number of the service center computer. The service center usually includes a computer that takes calls from servers with call-out capability. This computer is referred to as the *catcher*. The catcher expects messages in a specific format to which the service processor conforms. Contact your service provider for the correct service center telephone number to enter here. For

more information about the format and catcher computers, refer to the README file in the AIX `/usr/samples/syscatch` directory.

- **Customer Administration Center Telephone Number** is the number of the system administration center computer (catcher) that receives problem calls from servers. Contact your system administrator for the correct telephone number to enter here.
- **Digital Pager Telephone Number** is the number for a pager carried by someone who responds to problem calls from your server. Contact your administration center representative for the correct telephone number to enter here. For test purposes, use a test number, which you can change later.

  Note: Some modems, such as IBM 7857-017, are not designed for the paging function. Although they can be used for paging, they return an error message when they do not get the expected response from another modem. Therefore, even though the paging was successful, the error message causes the service processor to retry, continuing to place pager calls for the number of retries specified in the Call-Out policy Setup Menu. These retries result in redundant pages.

  For digital pagers that require a personal identification number (PIN) for access, include the PIN in this field as shown in the following example:

  ```
  18001234567,,,,87654
  ```

  The commas create pauses for the voice response system, and the 87654 represents the PIN. The length of these pauses is set in modem register S8. The default is usually 1 or 2 seconds each.
- **Customer Voice Telephone Number** is the telephone number of a phone near the server or answered by someone responsible for the server. This is the telephone number left on the pager for callback. For test purposes, use a test number, which you can change later.
- **Customer System Telephone Number** is the telephone number to which your server's modem is connected. The service or administration center representatives need this number to make direct contact with your server for problem investigation. This is also referred to as the *call-in* phone number.

Call-Out Policy Setup Menu

This menu allows you to set call-out policy.

```
        Call-Out Policy Setup Menu

   1. Call-Out policy (First/All):
       Currently First

   2. Remote timeout, (in seconds):
       Currently 120

   3. Remote latency, (in seconds):
       Currently 2

   4. Number of retries:
       Currently 2

  98. Return to Previous Menu

1>
```

- **Call-Out Policy**

  Can be set to 'First' or 'All'. If call-out policy is set to 'first', the service processor stops at the **first successful** call out to one of the following numbers:

  1. Service center
  2. Customer administration center
  3. Pager

  If call-out policy is set to 'all', the service processor attempts a call out to the following numbers in the order listed:

  1. Service center
  2. Customer administration center
  3. Pager

- **Remote timeout** and **Remote latency** are functions of your service provider's catcher computer. Either use the defaults or contact your service provider for arecommended settings. The default values are:

  Remote timeout
  120 seconds

  Remote latency
  2 seconds

- **Number of retries** is the number of times you want the server to retry calls that resulted in busy signals or in other error messages.

Customer Account Setup Menu

This menu allows users to enter information that is specific to their account.

```
        Customer Account Setup Menu

   1. Customer account number:
       Currently Unassigned

   2. Customer RETAIN login userid:
       Currently Unassigned

   3. Customer RETAIN login password:
       Currently Unassigned

  98. Return to Previous Menu

1>
```

- **Customer account number** is assigned by your service provider for record-keeping and billing. If you have an account number, enter it. Otherwise, leave this field blank.
- **Customer RETAIN login userid** and **Customer RETAIN login password** apply to a service function to which your service provider may or may not have access. Leave these fields blank if your service provider does not use RETAIN.

Call-Out Test

The call-out test verifies if the call-out function is working properly. Before the test, call-out must be enabled and the system configured properly for call-out.

During the setup, the user should have entered the phone numbers for the digital pager and customer voice for test purposes. These numbers are used to determine whether call-out is working during the call-out test.

The call-out test should cause the user's phone to ring. If the test is successful, call-out is working properly. The user should now change the test digital pager and customers voice number to the correct numbers.

Service Processor Functions

This section provides detailed information about the service processor functions.The RS/6000 44P Series Model 270 supports the functions listed in the following table:

Built-in Functions	Initialization and Test	Service Processor Basic Instructions Test (BIST)
		JTAG System Chip Initialization
	Error Data Collection	BIST/POST errors and status
		Checkstop FIR data logout
		Machine check logout
	Configuration	CPU Complex validation
		VPD Collection
	System Management	Reset and Reboot on System Firmware fail
		Reboot on system failure
Local User Function	User Interface	Local async console
		Text based menus with NLS
		Operator Panel messages
	Power and Miscellaneous	Power On/Off
		Configurable Reboot Policy
	Status and Data Access	VPD
		Error data (service processor)
		Error data (system)
		Environmental data
	Service Processor Setup Utilities	Passwords
		Phone numbers
		Language (NLS) selection
		Call In/Call Out enable/disable
		Flash (Gold/Recovery block) Update
		Flash (Composite block) Update
		System Name
		Modem Configuration

Remote User Functions	Call Out (Call Home) Reporting	Boot failure
		OS Termination
		Surveillance failure
		Critical EPOW reporting
		Checkstop
		Machine check
	Call In	Identify system by name
		Power-on via ring-indicate
		Password/security check
		Console mirroring/Quick disconnect

System Power-On Methods

This section discusses the following system power-on methods:

- Power-on switch
- Remote power-on via ring-indicate signal

  The server automatically powers on when it detects a ″ring indicate″ signal from a modem attached to one of the integrated serial ports.

  A remote user can call the server to activate ring detection by the modem. Listen for a few more rings than the threshold number for starting the system and then hang up. The default threshold is six rings.

  Wait 5 minutes for the server to initialize and then call again using an ASCII terminal. The server responds by requesting a password, if set, or presenting the service processor menus. The remote user now has control of the server.

  Note: For security, if the system is powered on by the remote power-on via ring indicate signal and the service processor detects a battery failure, the service processor causes the system to power off. See “Service Processor Call-In Security” on page 176 for more information.
- Unattended start mode - refer to **Enable/Disable Unattended Start Mode** on page 159.

  The service processor can be enabled to recover from the loss of ac power (see Enable/Disable Unattended Power-On Mode in the SYSTEM POWER CONTROL MENU). When ac power is restored, the system returns to the power state at the time ac loss occurred. For example, if the system was powered-on when ac loss occurred, it reboots/restarts when power is restored. If the system was powered-off when ac loss occurred, it remains off when power is restored.
- Timed power-on - refer to the **shutdown -t** command on servers using AIX.

  Working in conjunction with AIX, the service processor in your server can operate a timer, much like the wake-up timer on your clock radio. You can set the timer so that your server powers on at a certain time after shutting down. The timer is battery operated, so power interruptions occurring while the server is off do not affect its accuracy. Refer to the AIX **shutdown -t** command for details on setting the timer.

  Note: If an ac power loss is in progress when the timed power-on attempt occurs, the server is not able to power on when ac power is restored.
- Follow-up to a failed boot attempt

  The service processor initiates a power-on sequence if a failed boot attempt is detected (due to a hardware or software failure).
- Fast/Slow Boot (IPL) Capabilities

  Using the service processor menus, you can select the IPL type, mode, and speed of your system. For more information, refer to “System Power Control Menu” on page 159.

  Attention: Selecting fast IPL results in several diagnostic tests being skipped, and a shorter memory test being run.

Service Processor Call-In Security

If the service processor detects bad battery-powered storage (indicating that the battery on the system board has failed or has been removed), it maintains server security by disabling the call-in capability to both serial ports.

When call-in is disabled, the system can still be powered on by using the ring-indicator signal, but the service processor then causes the system to power down, preventing access to any system facilities or to AIX.

After battery power is restored, the password(s) must be reset and the call-in function(s) enabled. Both of these operations can be performed from service processor menus. See “Serial Port Selection Menu” on page 168.

Service Processor Reboot/Restart Recovery

Reboot describes bringing the system hardware back up; for example, from a system reset or power-on. The reboot process ends when control passes to the operating system loading (or initialization) process.

Restart describes activating the operating system after the system hardware is reinitialized. Restart must follow a successful reboot.

Boot (IPL) Speed

When the server enters reboot recovery, slow IPL is automatically started, which gives the POST an opportunity to locate and report any problems.

Failure During Boot Process

During the boot process, either initially after system power-on or upon reboot after a system failure, the service processor monitors the boot progress. If progress stops, the service processor can reinitiate the boot process (reboot) if enabled to do so. The service processor can re-attempt this process according to the number of retries entered in the Reboot/Restart Policy Setup Menu.

Failure During Normal System Operation

When the boot process completes and control transfers to the operating system (OS), the service processor can monitor operating system activity (see the Set Surveillance Parameters option in the SERVICE PROCESSOR SETUP MENU). If OS activity stops due to a hardware or software-induced failure, the service processor can initiate a reboot/restart process based on the settings in the Service Processor Reboot/Restart Policy Setup Menu and the OS automatic restart settings (see the operating system documentation).

If you are using the AIX operating system, the menu item under SMIT for setting the restart policy is Automatically Reboot After Crash (True/False). The default is False. When the setting is True, and if the service processor parameter ″Use OS-Defined Restart Policy″ is Yes (the default), the service processor takes over for AIX to reboot/restart after a hardware or surveillance failure.

Service Processor Reboot/Restart Policy Controls

The operating system's automatic restart policy (see operating system documentation) defines the operating system's response to a system crash. The service processor can be instructed to refer to that policy by the Use OS-Defined Restart Policy setup menu.

Processor Boot-Time Deconfiguration (CPU Repeat Gard)

Processor boot time deconfiguration allows for the removal of processors from the system configuration at boot time. The objective is to minimize system failure or data integrity exposure due to a faulty processor.

This function uses processor hardware built-in self-test (BIST) and firmware power-on self-test (POST) to discover and isolate processor hardware failures during boot time. It also uses the hardware error detection logic in the processor to capture run-time recoverable and irrecoverable errors. The firmware uses the error signatures in the hardware to analyze and isolate the error to a specific processor.

The processors that are deconfigured remain off-line for subsequent reboots until the faulty processor hardware is replaced.

This function allows users to manually deconfigure or re-enable a previously deconfigured processor through the service processor menu. The user can also enable or disable this function through the service processor.

Processor Run-Time Deconfiguration (CPU-Gard)

Processor run-time deconfiguration allows for the dynamic removal of CPUs from the system configuration. The objective is to minimize system failures or data integrity exposures due to a faulty processor. The processor to be removed is the one that has experienced repeated run-time recoverable internal errors (over a predefined threshold).

The function uses the hardware error detection logic in the processor to capture run-time recoverable errors. The firmware uses the error signatures in the hardware to analyze and isolate the error to a specific CPU. The firmware also maintains error-threshold information.

When the number of internal recoverable errors for a processor reaches a predefined threshold, the firmware notifies the AIX operating system. The AIX operating system migrates all software processes and interrupts to another processor and puts the faulty processor in stop state.

CPUs that are deconfigured at run time remain off-line for subsequent reboots through the CPU Boot Time Deconfiguration function, until the faulty CPU hardware is replaced. The user can also enable or disable this function via the AIX system management function.

Memory Boot-Time Deconfiguration (Memory Repeat Gard)

Memory boot time deconfiguration allows for the removal of a memory segment or DIMM from the system configuration at boot time. The objective is to minimize system failures or data integrity exposure due to faulty memory hardware. The hardware resource(s) to be removed are the ones that experienced the following failures:

- A boot-time test failure.
- Run-time recoverable errors over the error threshold prior to the current boot phase.
- Run-time irrecoverable errors prior to the current boot phase.

This function uses firmware power-on self-test (POST) to discover and isolate memory hardware failures during boot time. It also uses the hardware error detection logic in the memory controller to capture run-time recoverable and irrecoverable errors. The firmware uses the error signatures in the hardware to analyze and isolate the error to the specific memory segment or DIMM.

The memory segment or DIMM that is deconfigured remains off-line during subsequent reboots until the faulty memory hardware is replaced.

The function allows users to manually deconfigure or re-enable a previously deconfigured memory segment/DIMM through the service processor menu. The user can also enable or disable this function through the service processor menu.

Service Processor System Monitoring - Surveillance

Surveillance is a function in which the service processor monitors the system, and the system monitors the service processor. This monitoring is accomplished by periodic samplings called *heartbeats*.

Surveillance is available during two phases:

- System firmware bring-up (automatic)
- Operating system run time (optional)

System Firmware Surveillance

System firmware surveillance provides the service processor with a means to detect boot failures while the system firmware is running.

System firmware surveillance is automatically enabled during system power-on. It cannot be disabled by the user.

If the service processor detects no heartbeats during system boot (for 7 minutes), it cycles the system power to attempt a reboot. The maximum number of retries is set from the service processor menus. If the failure condition repeats, the service processor leaves the machine powered on, logs an error, and displays menus to the user. If call-out is enabled, the service processor calls to report the failure and displays the operating-system surveillance failure code on the operator panel.

Operating System Surveillance

The operating system surveillance provides the service processor with a means to detect hang conditions, as well as hardware or software failures, while the operating system is running. It also provides the operating system with a means to detect service processor failure caused by the lack of a return heartbeat.

Operating system surveillance is enabled by default, allowing the user to run operating systems that do not support this service processor option.

You can also use service processor menus and AIX service aid to enable or disable operating system surveillance.

For operating system surveillance to work correctly, you must set the following parameters:

- Surveillance enable/disable
- Surveillance interval

  This is the maximum time (in minutes) the service processor should wait for a heartbeat from the operating system before timeout.
- Surveillance delay

  This is the length of time (in minutes) for the service processor to wait from when the operating system is started to when the first heartbeat is expected.

Surveillance takes effect immediately after the parameters are set from the service processor menus.

If operating system surveillance is enabled (and system firmware has passed control to the operating system), and the service processor does not detect any heartbeats from the operating system, the service processor assumes the system is hung. The machine is left powered on and the service processor enters standby phase, displaying the operating system surveillance failure code on the operator panel. If call-out is enabled, the service processor calls to report the failure.

Call Out

The service processor can call out when it detects one of the following conditions:

- System firmware surveillance failure
- Operating system surveillance failure (if supported by the operating system)
- Critical environmental failures
- Restarts

To enable the call-out feature, do the following:

1. Have a modem connected to serial port 1 or 2
2. Set up the following using the service processor menus or diagnostic service aids:
   - Enable call out for the serial port where the modem is connected.
   - Set the serial port line speed.
   - Enter the modem configuration filename.
   - Set up site-specific parameters (such as phone numbers for call out and call out policy).
   - To call out before restart, set **Call-Out before restart** to ENABLED from the Reboot/Restart Policy Setup menu.

Note: Some modems, such as IBM 7857-017, are not designed for the paging function. Although they can be used for paging, they return an error message when they do not get the expected response from another modem. Therefore, even though the paging was successful, the error message causes the service processor to retry, continuing to place pager calls for the number of retries specified in the Call-Out policy Setup Menu. These retries result in redundant pages.

Console Mirroring

Console mirroring allows a user on a local ASCII terminal to monitor the service processor activities of a remote user. Console mirroring ends when the service processor releases control of the serial ports to the system firmware.

System Configuration for Console Mirroring

The following describes the system configuration for console mirroring:

- Modem connected to one serial port and enabled for incoming calls
- Local ASCII terminal connected to the other serial port. This local terminal can be connected directly to your server or connected through another modem.

Remote console mirroring can be invoked in two ways:

1. Remote session first, then local session added:
   a. Remote session already in progress.
   b. Remote user uses the service processor menus to enable console mirroring, allowing both consoles to be active.
2. Local session first, then remote session added:
   a. Local session is already in progress.
   b. The service processor receives a call from the remote user.
   c. The local user selects the option to enable console mirroring. The service processor immediately begins mirroring service processor menus.

Note: To disconnect quickly, press Ctrl+D on either console, and both sessions will exit the service processor menus.

Service Processor Firmware Updates

Attention: Only the service processor firmware can be updated from the service processor menus; the system firmware cannot be updated from the service processor menus. A service processor firmware update always requires a companion system firmware update which must be applied first. For this reason, updating only the service processor firmware using the service processor menus is not recommended. Go to the RS/6000 support web site at http://www.rs6000.ibm.com/support/micro to download the latest firmware levels and update instructions.

The service processor firmware update image must be written onto a DOS-formatted diskette. The update image can be obtained from the RS/6000 support web site: http://www.rs6000.ibm.com/support/micro.

After the update diskette has been made, from the service processor main menu, select ″Service Processor Setup″. Then select ″Reprogram Service Processor Flash EPROM″. The program requests the update diskette(s) as they are needed. The service processor will automatically reboot after the firmware update is complete.

Service Processor Error Log

The service processor error log contains information about errors reported by the service processor.

```
                          Error Log

19991118165344  1. 4B276851 CPU BIST fail detected
FRUs to replace: P1-C1



   Press "C" to clear error log, any other key to continue.  >
```

The time stamp in this error log is Coordinated Universal Time (CUT), also known as Greenwich Mean Time (GMT). AIX error logs have more information available and are able to time stamp with local time.

System POST Errors

If POST (Power-On Self-Test) errors occur during startup, this error log helps isolate faults when used with the diagnostics.

```
                          Read System POST Errors



Version : 0
Severity : 0
Disposition : 0
Initiator : 0
Event being reported : 0

Extended Error Log Data:
0xC2 0x00 0x84 0x09 0x00 0x00 0x00 0x00
0x20 0x00 0x00 0x00 0x00 0x00 0x72 0x74
0x63 0x00 0x00 0x00 0x00 0x00 0x00 0x00
0x00 0x00 0x28 0x03 0x00 0x05 0x00 0x01
0x00 0x00 0x00 0x00 0x00 0x00 0x00 0x00
0x49 0x42 0x4D 0x00 0x55 0x30 0x2E 0x31
0x2D 0x50 0x31 0x2D 0x58 0x31 0x00

                    (Press Return to Continue)
```

Service Processor Operational Phases

This section provides a high-level flow of the phases of the service processor.

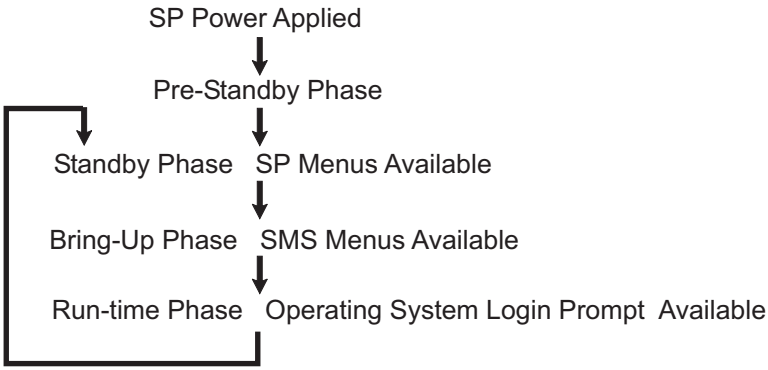

Pre-Standby Phase

This phase is entered when the server is connected to a power source. The server may or may not be fully powered on. This phase is exited when the power-on self-tests (POST) and configuration tasks are completed.

The pre-standby phase components are:

- Service processor initialization - Performs any necessary hardware and software initializations.
- Service processor POST - Conducts power-on self-tests on its various work and code areas.
- Service processor unattended start mode checks - To assist fault recovery. If unattended start mode is set, the service processor automatically reboots the server. The service processor does not wait for user input or power-on command, but moves through the phase and into the bring-up phase. Access SMS menus or service processor menus to reset the unattended start mode.

Standby Phase

The standby phase can be reached in either of two ways:

- With the server off and power connected (the normal path), recognized by `0K` in the LCD display.
- OR
- With the server on after an operating system fault, recognized by `STBY` or an 8-digit code in the LCD display.

In the standby phase, the service processor takes care of some automatic duties and is available for menu operation. The service processor remains in the standby phase until a power-on request is detected.

The standby phase components are as follows:

- Modem configuration

The service processor configures the modem (if installed) so that incoming calls can be received or outgoing calls can be placed.

- Dial In

  Monitor incoming phone line to answer calls, prompt for a password, verify the password, and remotely display the standby menu. The remote session can be mirrored on the local ASCII console if the server is so equipped and the user enables this function.

- Menus

  The service processor menus are password-protected. Before you can access them, you need either the general-access password (or GAP) or privileged-access password (or PAP).

Bring-Up Phase

This phase is entered upon power-on, and exited upon loading of the operating system.

The bring-up phase components are:

- Retry Request Check

  The service processor checks to see if the previous boot attempt failed. If two consecutive failures are detected, the service processor displays an error code and places an outgoing call to notify an external party if the user has enabled this option.

- Dial Out

  The service processor can dial a preprogrammed telephone number in the event of an IPL failure. The service processor issues an error report with the last reported IPL status indicated and any other available error information.

- Update Operator Panel

  The service processor displays operator panel data on the ASCII terminal if a terminal is connected either locally or remotely.

- Environmental Monitoring

  The service processor provides expanded error recording and reporting.

- System Firmware Surveillance (Heartbeat Monitoring)

  The service processor monitors and times the interval between system firmware heartbeats.

- Responding to system processor commands

  The service processor responds to any command issued by the system processor.

Run-time Phase

This phase includes the tasks that the service processor performs during steady-state execution of the operating system.

- Environmental Monitoring

  The service processor monitors voltages, temperatures, and fan speeds (on some servers).

- Responding to System Processor Commands

  The service processor responds to any command issued by the system processor.

- Run-Time Surveillance (Heartbeat Monitoring)

If the device driver is installed and surveillance enabled, the service processor monitors the system heartbeat. If the heartbeat times out, the service processor places an outgoing call. This is different from the bring-up phase scenario where two reboot attempts are made before placing an outgoing call.

Service Processor Procedures in Service Mode

When the system is in service mode, the following service processor parameters are suspended:

- Unattended start mode
- Reboot/restart policy
- Call-Out
- Surveillance

When service mode is exited, the service processor parameters revert to the customer settings.

Chapter 8. System Management Services

Use the System Management Services menus to view information about your computer and to perform such tasks as setting passwords and changing device configurations.

If you have chosen a graphical display as your system console, you can use the graphical System Management Services described below. If you are using an ASCII display as your system console, see “Text-Based System Management Services” on page 209.

Graphical System Management Services

To start the Graphical System Management Services, turn on or restart the computer.

The firmware version installed in your system unit is displayed at the bottom right corner of the initial logo screen. Note the version number; processor upgrades may require a specified version of firmware to be installed in your system unit. (Update System Firmware is an option under the Utilities menu in the System Management Services.)

After the logo is displayed, initialization icons display across the bottom of the screen.

To enter the Graphical System Management Services, you must press the F1 key *after the keyboard icon displays* during startup and before the tone.

If you have pressed the F1 key, the System Management Services menu displays after the initialization and power-on self-test (POST) are complete.

Note: If you have installed a privileged-access password, you are prompted for this password before you gain access to the System Management Services menu.

After the System Management Services starts, the following screen displays.

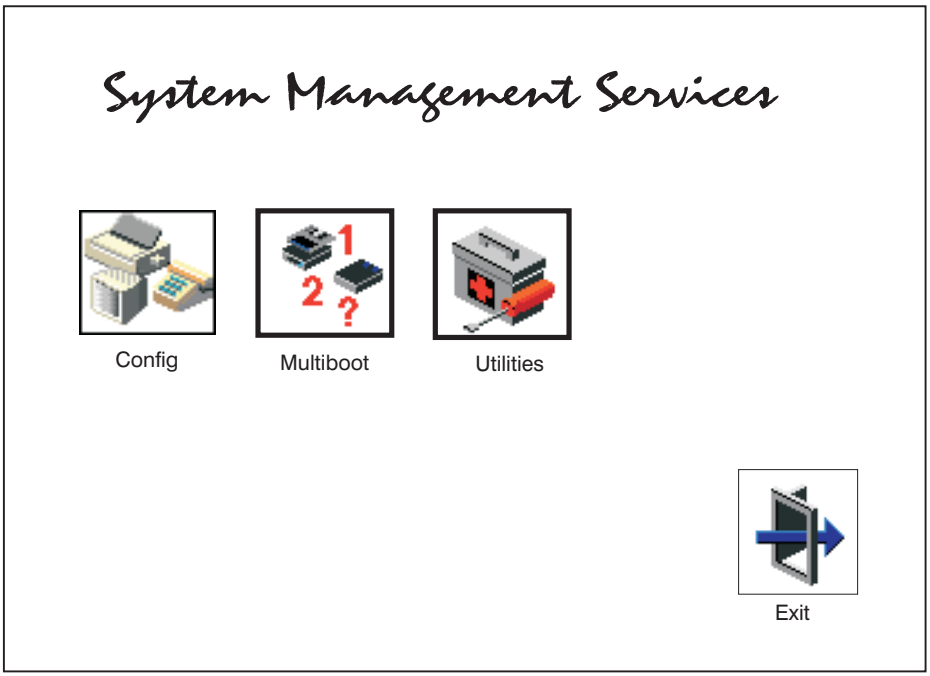

You can also press F8 here to enter the open firmware 0K> prompt.

The System Management Services screen contains the following choices.

Config: Enables you to view your system configuration. Go to “Config” on page 190.

Multiboot: Enables you to set and view the default operating system, modify the boot sequence, access the open firmware command prompt, and work with other options. Go to “Multiboot” on page 191.

Utilities: Enables you to set and remove passwords, enable the unattended start mode, set and view the addresses of your system’s SCSI controllers, select the active console, view or clear the firmware error log, and update your system unit’s firmware program. Go to “Utilities” on page 193.

Exit: Returns you to the previous screen.

To select an icon, move the cursor with the arrow keys to choose which icon is highlighted, then press the Enter key. You can also select an icon by clicking on it with your left mouse button. To leave the current screen, either press the Esc key or select the **Exit** icon.

Config

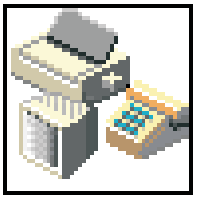

By selecting this icon, you can view information about the setup of your system unit. A list similar to the following appears when you select the **Config** icon.

Device Name
PowerPC, POWER3 375 MHz
L2-Cache, 4096K
PowerPC, POWER3 375 MHz
L2-Cache, 4096K
Memory
Memory Card slot 1, Module Slot =1 size=128MB
Memory Card slot 1, Module Slot =2 size=128MB
Service Processor
Tablet Port
LPT addr=378
Com addr=3F8
Com addr=2F8
Audio
Keyboard
Mouse
Diskette addr=3F0
Integrated Ethenet
addr=0004acdeea44
SCSI controller id= 7

Exit

If more than one screen of information is available, a blue arrow displays in the top right corner of the screen. Use the page up and page down keys to scroll through the pages.

Multiboot

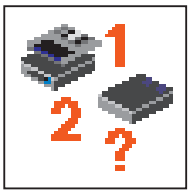

The options available from this screen allow you to view and set various options regarding the operating system and boot devices.

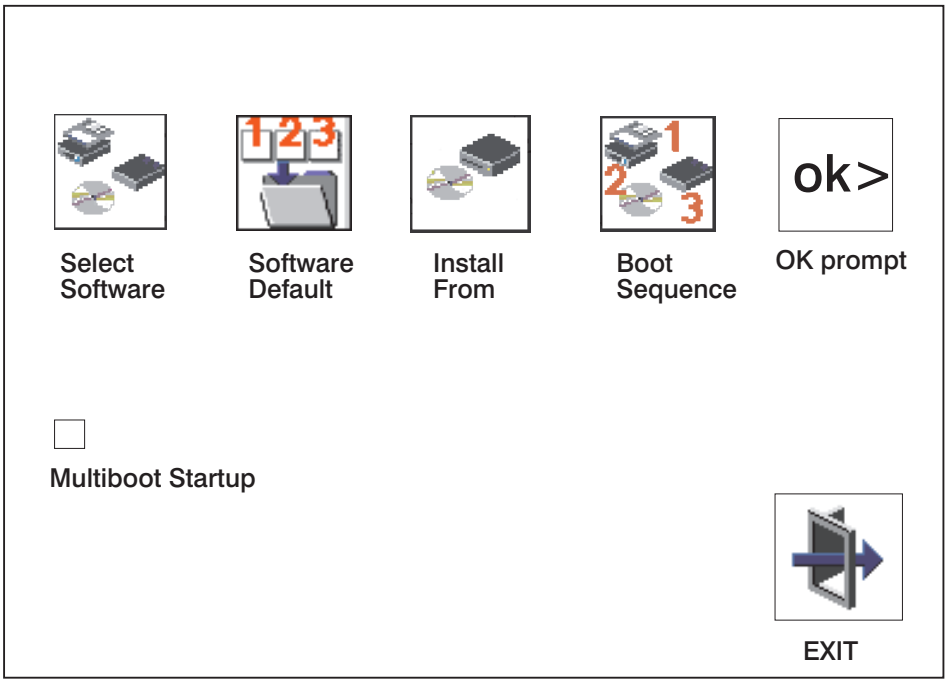

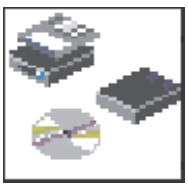

The following describes the choices available on this screen.

Select Software: This option, if supported by the operating system, allows you to choose which operating system to use. Choosing an operating system causes the system to start. This option is supported by AIX. However, not all operating systems support this option.

If you receive an informational message saying that no operating system is installed, then the system information in nonvolatile storage may have been lost. This situation can occur if the battery has been removed. To correct this situation, refer to the **bootlist** reference in your AIX operating system documentation.

Software Default: This option, if supported by the operating system, enables you to select a default operating system for your system unit.

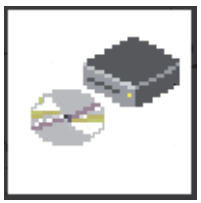

Install From: Enables you to select a media drive from which to install an operating system. Selection of a device is done using the spacebar.

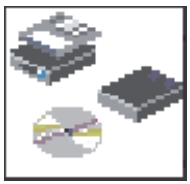

Boot Sequence: Enables you to view and change the custom boot list (the sequence in which devices are searched for operating system code). You may choose from 1 to 5 devices for the custom boot list.

The default boot sequence is:
1. Diskette
2. The CD-ROM drive
3. Tape drive
4. Hard disk drive
5. Network adapter

To change the custom boot list, enter a new order in the **New** column, then click on the **Save** icon. The list of boot devices is updated to reflect the new order.

Attention: To change the custom boot list back to the default values, click on **Default**. If you change your startup sequence, you must be extremely careful when performing *write* operations (for example, copying, saving, or formatting). You can accidentally overwrite data or programs if you select the wrong drive.

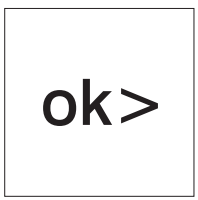

OK Prompt: Enables you to go directly to the open firmware command prompt. The open firmware command prompt is used for debugging and device driver development. For more information about the operation of the open firmware command prompt, refer to IEEE Standard 1275.

The **open firmware** command line can also be used to set up adapters that are not configurable with the System Management Services. Your adapter documentation directs you to use this option if it is needed. Do not invoke this feature if you are not familiar with open firmware. To exit from the command prompt, restart your system.

Multiboot Startup: Clicking on this button toggles whether the Multiboot menu displays automatically at startup.

Utilities

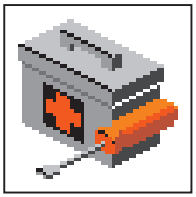

Selecting this icon enables you to perform various tasks and view additional information about your system unit.

The following describes the choices available on this screen.

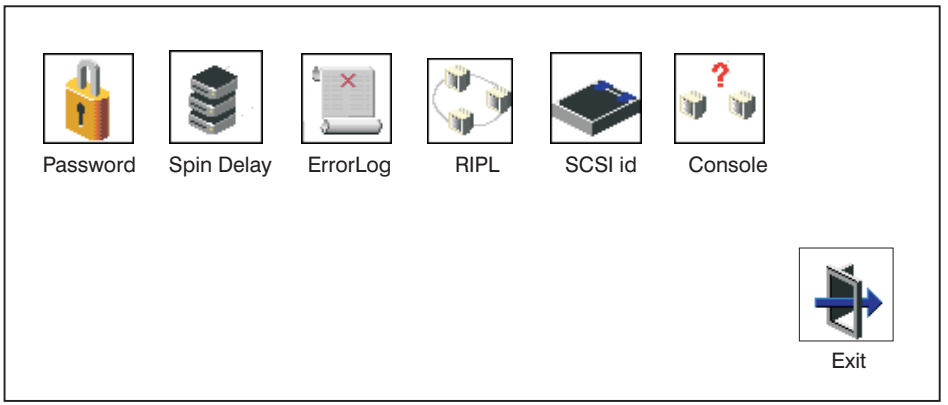

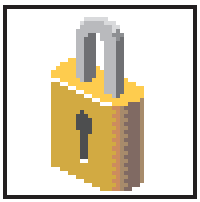

Password: Enables you to set password protection for turning on the system unit and for using system administration tools. Go to “Password” on page 195.

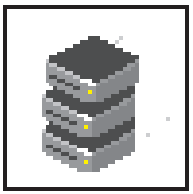

Spin Delay: Enables you to change the spin-up delay for SCSI hard disk drives attached to your system. Go to “Spin Delay” on page 199.

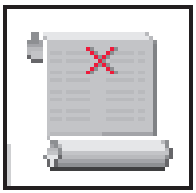

Error Log: Enables you to view and clear the firmware error log for your system unit. Go to “Error Log” on page 200.

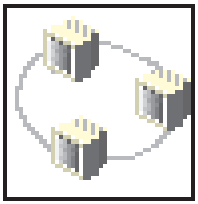

RIPL (Remote Initial Program Load): Enables you to select a remote system from which to load programs through a network adapter when your system unit is first turned on. This option also allows you to configure network adapters, which is required for RIPL. Go to “RIPL” on page 201.

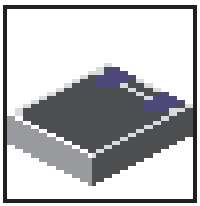

SCSI ID: Allows you to view and change the addresses (IDs) of the SCSI controllers attached to your system unit. Go to “SCSI ID” on page 206.

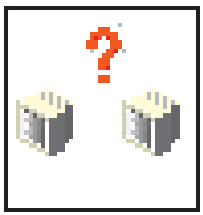

Console: Allows the user to select which console to use to display the SMS menus. This selection is only for the SMS menus. It does not affect the display used by the AIX operating system.

Follow the instructions that display on the screen. Pressing the number 1 key after the keyboard icon appears and before the tone returns you to SMS.

Password

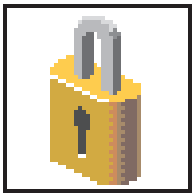

Select this icon to perform password-related tasks.

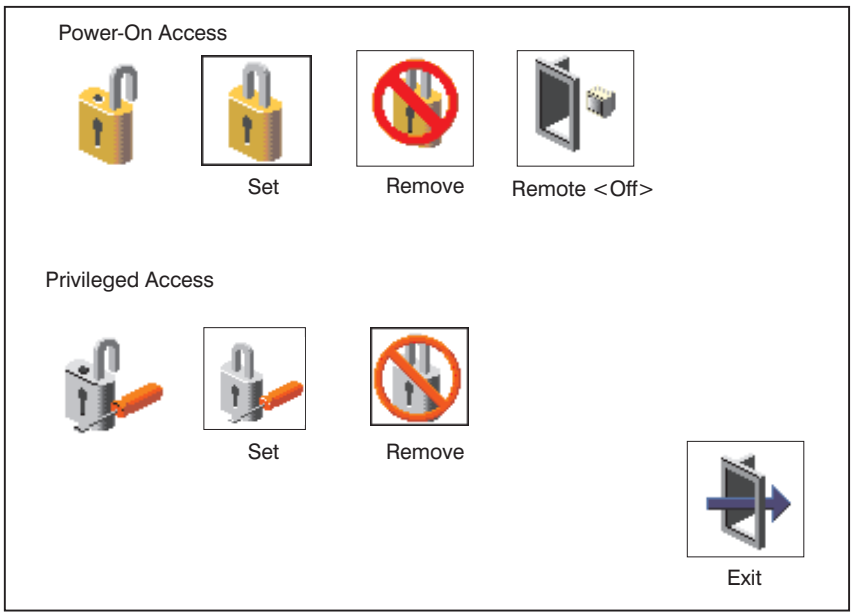

Power-On Access Password

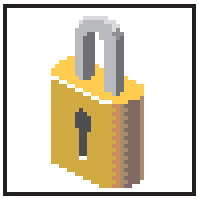

Setting a **Power-On Access** password helps protect information stored in your system unit. If a power-on access password is set for your system unit, the power-on access status icon is shown in the locked position. If a power-on access password is not set, then the power-on access status icon is shown in the unlocked position (as shown in the screen above).

When you select the **Set** icon, a screen with eight empty boxes displays. Type your password in these boxes. You can use any combination of up to eight characters (A–Z, a–z, and 0–9) for your password. As you type a character, a key appears in the box.

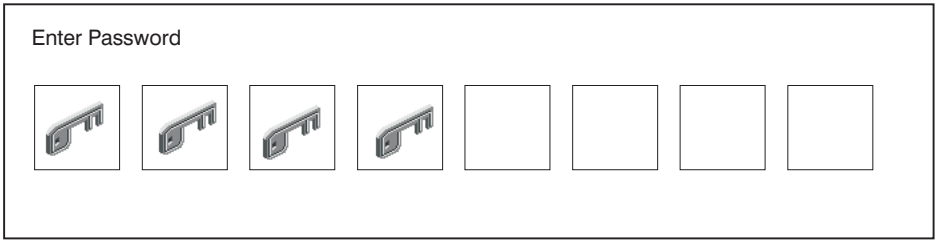

Press Enter when you are finished; you must type the password again for verification.

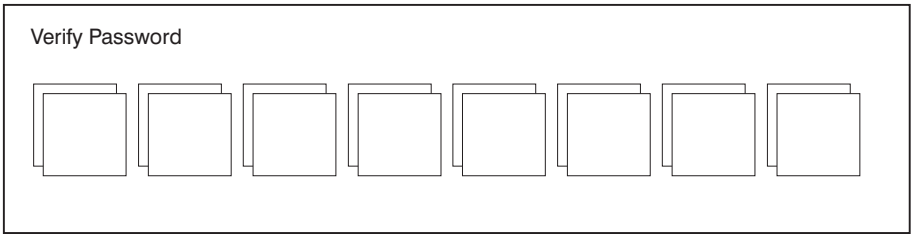

If you type the password incorrectly, press the Esc key and start again.

If the two password entries do not match, an error icon appears with an error code: 20E00000.

Note: After you have entered and verified the password, the power-on access password icon flashes and changes to the locked position to indicate that your system unit now requires the password you just entered during the power on process.

If you previously had set a power-on-access password and want to remove it, select the **Remove** icon. 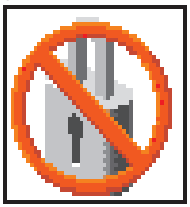

After you have selected the remove icon, the power-on-access status icon flashes and changes to the unlocked position to indicate that the power-on-access password is not set.

Note: If you *forget* the power-on access password, you can erase the password by shutting down the system unit and removing the battery for at least 30 seconds. The system unit power cable *must* be disconnected before removing the battery.

A password becomes effective only after the system is turned off and back on again.

Remote Mode

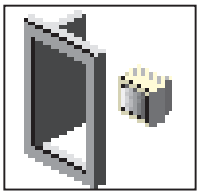

Remote Mode: The remote mode, when enabled, allows the system to start from the defined boot device. This mode is ideal for network servers and other system units that operate unattended. When the remote mode is set, the icon label changes to **Remote <On>**
Note: To use the remote mode feature for booting unattended devices, you must enable the unattended start mode. See the “System Power Control Menu” on page 159 for instructions on enabling the unattended start mode, which allows the system unit to turn on whenever ac power is applied to the system (instead of having the system unit wait for the power button to be pushed).

Privileged-Access Password

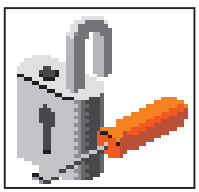

The privileged-access password protects against the unauthorized starting of the system programs. Select the **Set** icon to set and verify the privileged-access password.

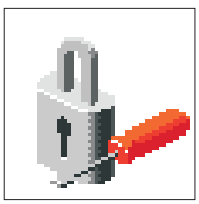

When you select the **Set** icon, a screen with eight empty boxes displays. Type your password in these boxes. You can use any combination of up to eight characters (A-Z, a-z, and 0-9) for your password. As you type a character, a key displays in the box.

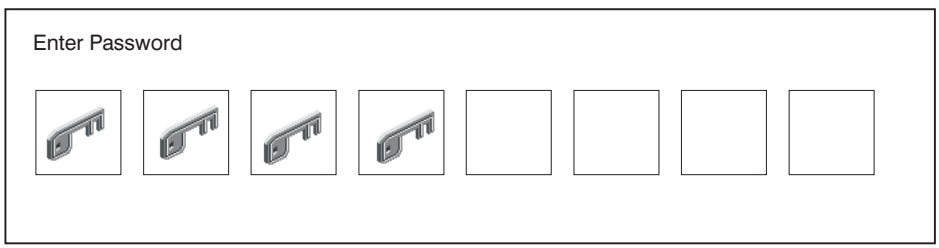

Press Enter when you are finished; you must type the password again for verification.

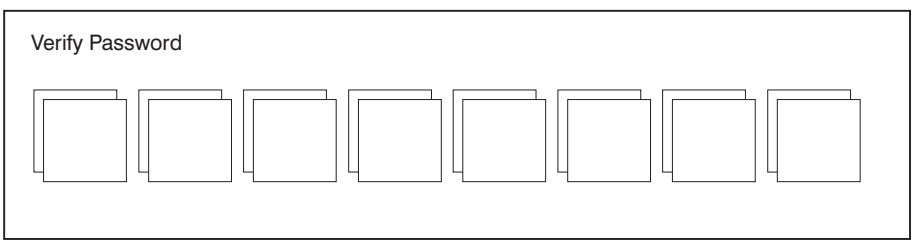

If you type the password incorrectly, press the Esc key and start again.

If the two password entries do not match, an error icon displays with the error code 20E00001.

Note: After you have entered and verified the password, the privileged-access password icon flashes and changes to the locked position to indicate that your system unit now requires the password you just entered before running system programs.

If you previously had set a privileged-access password and want to remove it, select the **Remove** icon.

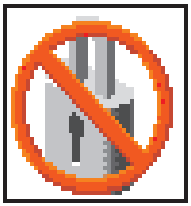

After you have selected the **Remove** icon, the privileged-access status icon flashes and changes to the unlocked position to indicate that the privileged-access password is not set.

Attention: If no user-defined bootlist exists and the privileged-access password has been enabled, you are asked for the privileged-access password at startup every time you boot your system.

Spin Delay

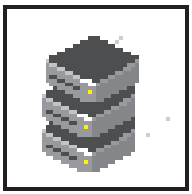

Select this icon to change the spin-up delay for SCSI hard disk drives attached to your system. Spin-up delay values can be entered manually or you can use a default setting. All values are measured in seconds. The default is two seconds. After you have entered the new spin-up delay values, use the arrow keys to highlight the **Save** icon and press Enter.

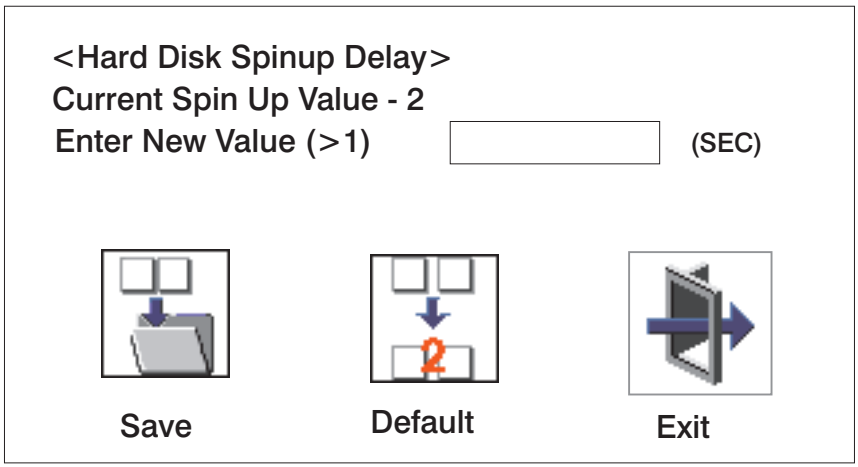

Error Log

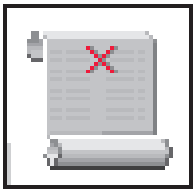

Selecting this icon displays the log of errors that your system unit has recorded during operations.

The following is an example of an error log screen:

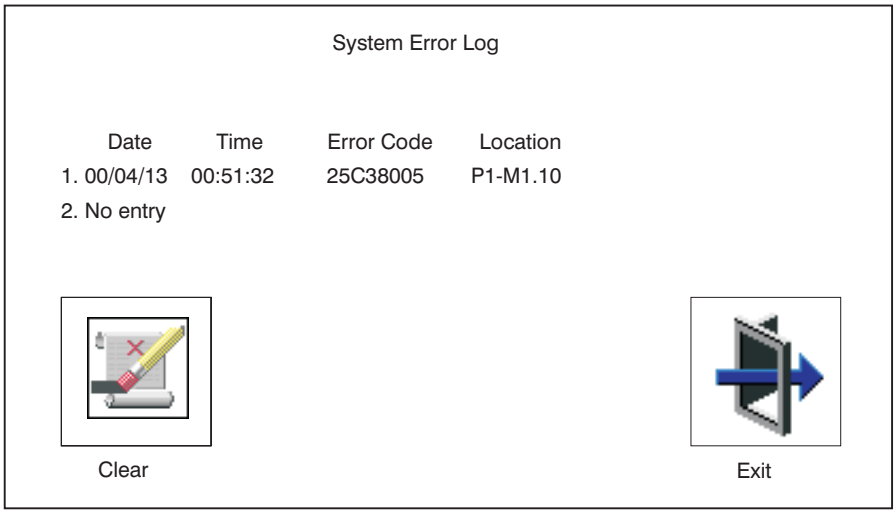

Selecting the **Clear** icon erases the entries in this log.

This error log only shows the first and last errors.

RIPL

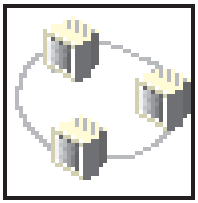

Selecting the Remote Initial Program Load (RIPL) icon gives you access to the following selections.

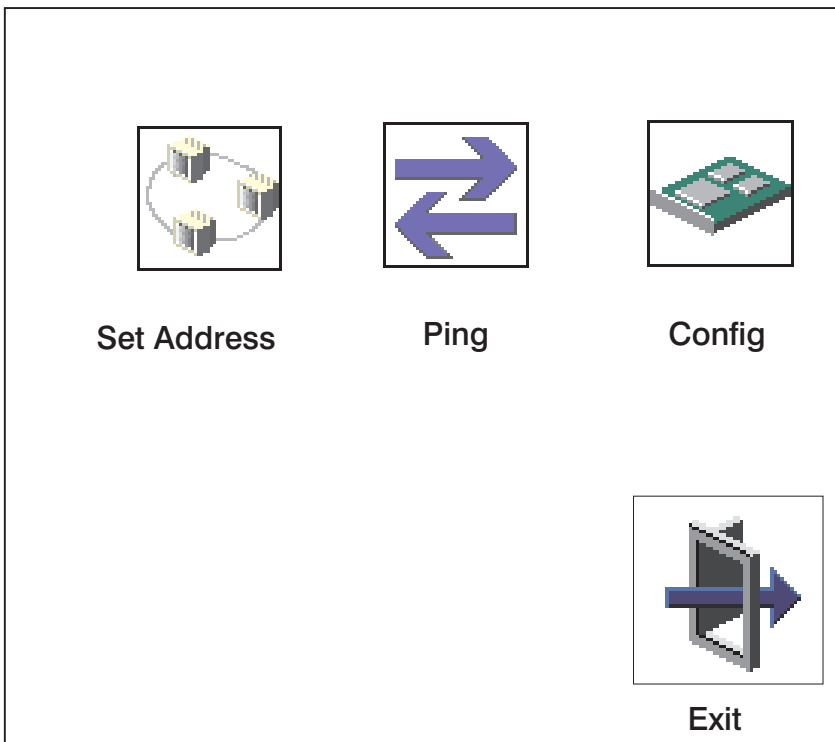

Set Address

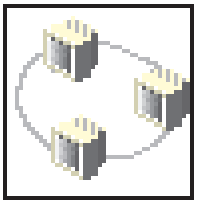

The **Set Address** icon allows you to define addresses from which your system unit can receive RIPL code.

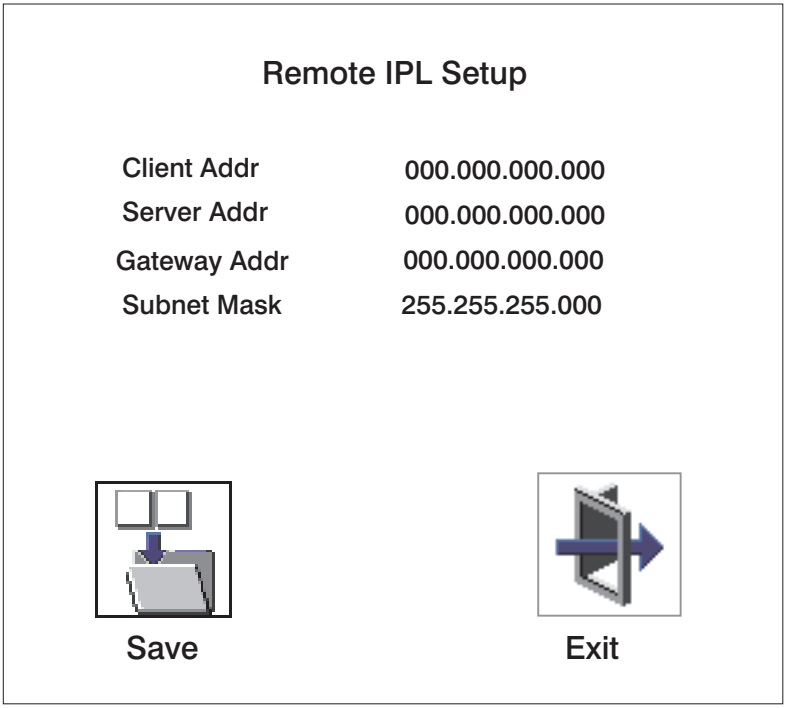

If any of the addresses is incomplete or contains a number other than 0 to 255, an error message displays when you select the **Save** icon. To clear this error, correct the address and select **Save** again.

Attention: If the client system and the server are on the same subnet, set the gateway IP address to [0.0.0.0].

To change an address, press the backspace key on the highlighted address until the old address is completely deleted. Then enter the new address.

Ping

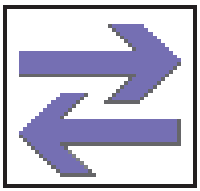

The **Ping** icon allows you to confirm that a specified address is valid by sending a test transmission to that address.

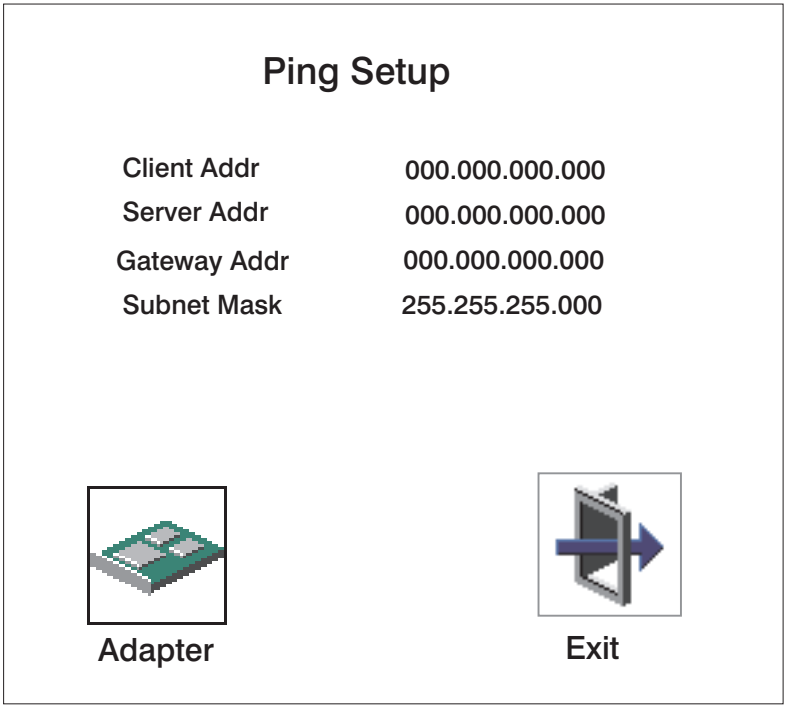

To change an address, press the backspace key on the highlighted address until the old address is completely deleted. Then enter the new address.

Selecting the **Ping** icon displays a screen in which you select the communications (token-ring or Ethernet) to be used to send test transmissions.

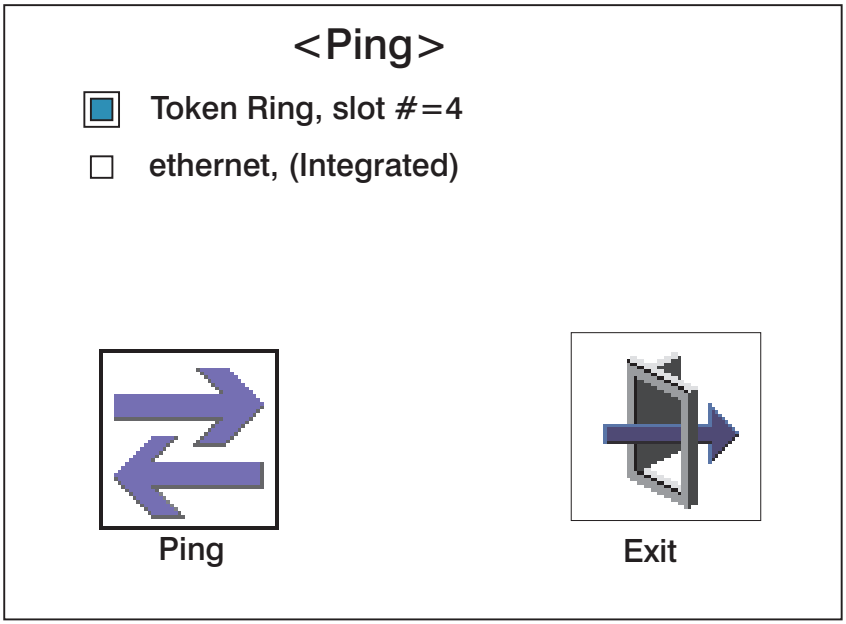

To use this screen, do the following:

1. Use the arrow keys or mouse to highlight an adapter to configure.
2. Press the spacebar to select the adapter.
3. Highlight the **Ping** icon and press Enter to send the test transmission.

Config

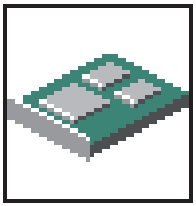

The **Config** icon allows you to configure network adapters which require setup.

Selecting the **Config** icon causes a list of the adapters requiring configuration to display.

To use this screen, do the following:

1. Use the arrow keys or mouse to highlight an adapter to configure.
2. Press the spacebar to select the adapter.
3. Highlight the **OK** icon and press Enter.

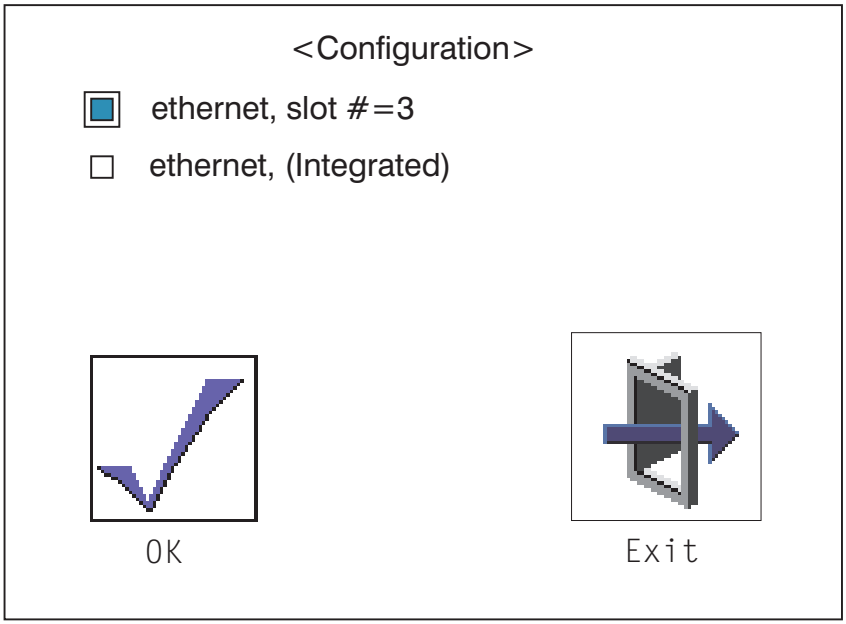

SCSI ID

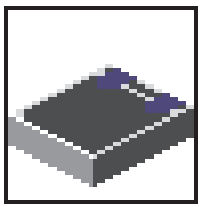

Select this icon to view and change the addresses (IDs) of the SCSI controllers attached to your system unit. To change a SCSI controller ID, highlight the entry by moving the up or down arrow keys, then use the spacebar to scroll through available IDs. After you have entered the new address, use the left or right arrow keys or mouse to highlight the **Save** icon and press Enter.

At any time in this process, you can select the **Default** icon to change the SCSI IDs to the default value of 7.

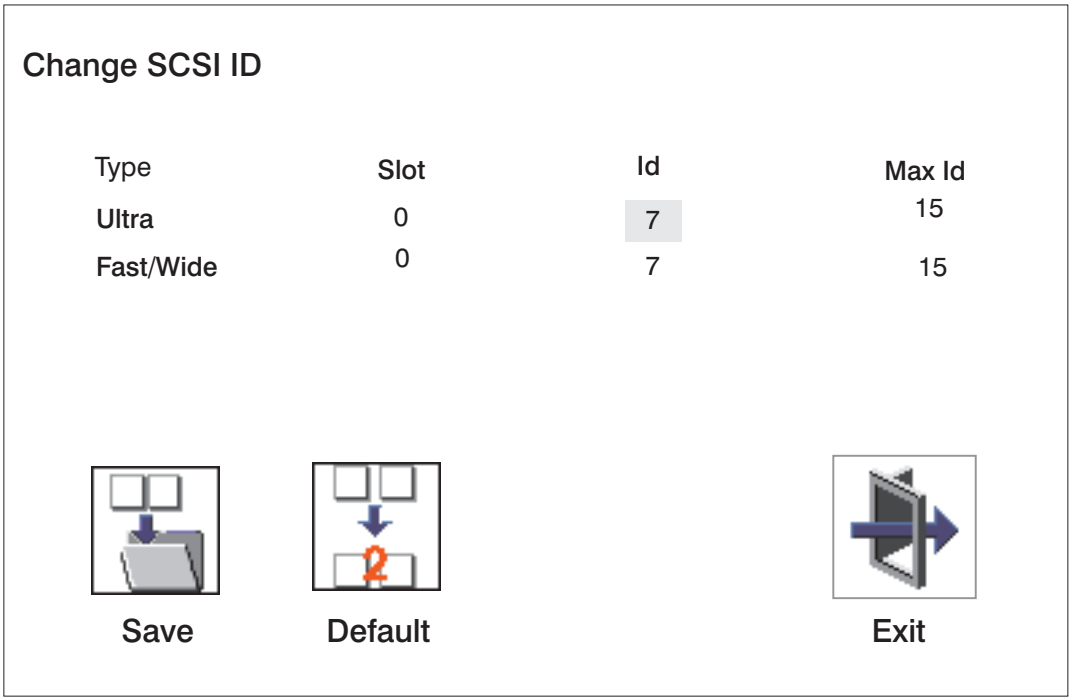

Firmware Update

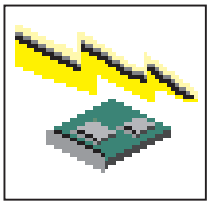

ATTENTION: The system management service firmware update utility does not support the combined image update precess. It is recommended only for those systems that cannot boot AIX. Detailed instructions on using the system management system utilities to update system and service processor firmware can be optained from the RS/6000 support web site: http://www.rs6000.ibm.com/support/micro.

If you are not able to obtain firmware update images or instructions from this web site, contact your service representative.

If the firmware update image is available on your network or another system, please see appendix C, ″firmware Update″, for instructions on the updating the system and service processor firmware using a combined image from the AIX.

Firmware Recovery

If a troubleshooting procedure has indicated that the system firmware unit has been damaged, it may be possible to recover it. For example, if the system hangs during startup with `E1EA` displayed on the operator panel, the system firmware has been damaged but may be recovered.

To recover a damaged system firmware, do the following:

1. Create a firmware recovery diskette. This must be a 3.5″ high-density (1.44 MB) diskette that has been formatted for DOS.
2. Obtain the system firmware update image file from one of the following sources:
   a. From the Web address: http://www.rs6000.ibm.com/support/micro
   b. From a service representative if you cannot access the Web address.
3. Copy the system firmware update image file to the recovery diskette, naming it PRECOVER.IMG. The file must be written in DOS format.
4. When the system stops booting, for example at `E1EA`, insert the recovery diskette. If the diskette drive LED does not light up, power the system unit off, then back on again.
5. If the recovery procedure is successful, the system will continue starting up and display checkpoints of the form `E1XX`.
6. Enter the System Management Service menu. When the keyboard indicator displays, press the 1 key if the system console is an ASCII terminal. If the system console is a graphics display and directly attached keyboard, press the F1 key.

7. When the main menu displays, choose Utilities, then perform a firmware update of the system firmware as described on “Firmware Update” on page 207.

Text-Based System Management Services

The text-based System Management Services are available if an ASCII terminal is attached to your system unit. The text-based System Management Services make it possible for you to view information about your system unit and to perform such tasks as setting passwords and changing device configurations.

To start the text-based System Management Services, press the number **1** key on the ASCII terminal keyboard when the keyboard text symbol displays during startup and before the tone sounds. After the text-based System Management Services starts, the following screen displays.

Note: The version of firmware currently installed in your system unit is displayed at the top of each screen in the text-based System Management Services. Note the version number. Processor and other device upgrades may require a the specific version of firmware to be installed in your system unit. Update System Firmware is an option under the Utilities menu.

```
System Management Services


 1   Display Configuration
 2   Multiboot
 3   Utilities
 4   Select Language


                                                  .------.
                                                  |X=Exit|
                                                  `------'


 ===>
```

After you have finished using the text-based System Management Services, type **x** (for exit) to start the system unit. Typing **x** on all other screens will take you back to the previous screen.

Display Configuration

This option provides information about the setup of your system unit. A screen similar to the following is displayed.

```
  Device Name

  Power PC, POWER3  375 MHz
  L2-Cache 4096K
  Power PC, POWER3  375 MHz
  L2-Cache 4096K
  Memory
     Memory card slot=1, module slot=1 size=128MB
     Memory card slot=1, module slot=2 size=128MB
  Service Processor
  Tablet Port
  LPT addr=378
  COM addr=3F8
  COM addr=2F8
  Audio
  Keyboard
  Mouse
  Diskette Drive  addr=3F0
  SCSI controller id=7



.-----------. .-----------.                              .------.
|P=prev-page| |N=next-page|                              |X=Exit|
`-----------' `-----------'                              `------'
```

Multiboot Menu

Use this screen to view and set various options regarding the operating system and boot sequence.

```
Multiboot Menu

 1 Select Software
 2 Software Default
 3 Select Install Device
 4 Select Boot Device
 5 OK Prompt
 6 Multiboot Startup









                                                  .------.
                                                  |X=Exit|
                                                  `------'

 ===>
```

Select Software: If this option is supported by the operating system, shows the name of the operating system installed. This option may not be supported by all operating systems.

If you are running on AIX and you receive the following message:

```
No Operating System Installed
```

this indicates that information in nonvolatile storage could have been lost, as would happen if the battery had been removed. To re-create this value, run the **bootlist** command under AIX with the appropriate parameters as to the location of the operating system in a particular hard disk. See the **bootlist** command in your AIX documentation.

Software Default: If supported by the operating system, lets you select the default operating system to start the system. This option may not be supported by all operating systems.

Select Install Device: Produces a list of devices, for example the CD-ROM, from which the operating system can be installed. Select a device and the system searches the device for an operating system to install and if supported by the operating system in that device, the name of the operating system displays.

Select Boot Device: Provides a list of devices that can be selected to be stored on the boot list. Up to five devices are supported.

OK Prompt: Provides access to the open firmware command prompt.

Multiboot Startup: Toggles between OFF and ON and selects whether the Multiboot menu invokes automatically on startup.

Select Boot Device

Select this option to view and change the custom boot list, which is the sequence of devices read at startup time.

```
Select Boot Devices

 1 Display Current Settings
 2 Restore Default Settings
 3 Configure 1st Boot Device
 4 Configure 2nd Boot Device
 5 Configure 3rd Boot Device
 6 Configure 4th Boot Device
 7 Configure 5th Boot Device


                                                .-------.
                                                |X=Exit|
                                                `-------'

 ===>
```

Display Current Settings: Lists the current order of devices in the boot list. The following screen shows an example of this display.

```
Current Boot Device

 1. Diskette
 2. Ethernet (Integrated)
 3. SCSI CD-ROM            id=3   (slot=1)
 4. SCSI 4.5 GB Hard Disk  id=6   (slot=1)
 5. SCSI 4.5 GB Hard Disk  id=5   (slot=5)




                                                .------.
                                                |X=Exit|
                                                `------'
```

Restore Default Settings: Restores the boot list to the default device of:

1. Primary diskette drive
2. CD-ROM drive
3. Tape drive
4. Hard disk drive
5. Network adapter.

Attention: To change the custom boot list back to the default values, select the **Default**. If you change your startup sequence, you must be extremely careful when performing *write* operations (for example, copying, saving, or formatting). You can accidentally overwrite data or programs if you select the wrong drive.

Configure Nth Boot Device

In the description below, **Nth** can be **1st, 2nd, 3rd,** etc. depending on your choice on the previous menu.

Options display a screen similar to the following:

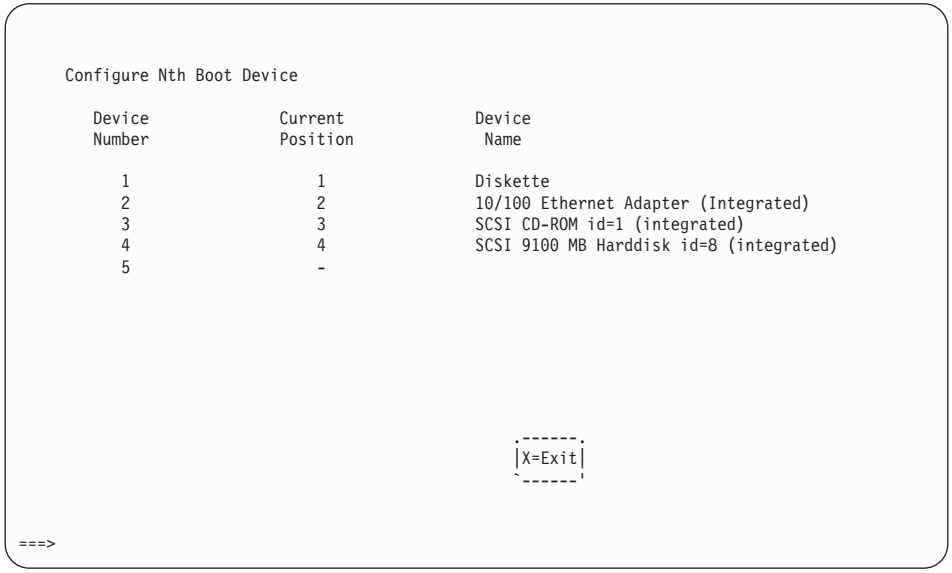

Type the device number of the device name that you want to select as the **Nth** boot device. For example, if you entered this menu by selecting 4 on the previous menu (configure 2nd boot device), then enter the number 3 based on the list shown above. You are thus selecting the SCSI CD-ROM device to be the 2nd **(Nth)** device in the boot sequence.

Utilities

The Utilities screen enables you to select from the following system management tools.

```
Utilities

 1 Set Passwords and Unattended Start Mode
 2 SCSI Spin up
 3 Display Error Log
 4 Remote Initial Program Load Setup
 5 Change SCSI id
 6 Update System Firmware
 7 Update Service Processor Firmware
 8 Select Console




                                                  .------.
                                                  |X=Exit|
                                                  `------'
===>
```

Set Password and Unattended Start Mode

Entering this selection permits access to the following options.

```
Password Utilities

 1 Set Power-On Access Password
 2 Remove Power-On Access Password
 3 Unattended Start Mode <OFF>
 4 Set Privileged-Access Password
 5 Remove Privileged-Access Password




                                                .-------.
                                                |X=Exit|
                                                `-------'
===>
```

Set Power-On Access Password

Setting a power-on access password helps protect information stored in your computer. You can use any combination of up to eight characters (A-Z, a-z, and 0-9) for your password. The password you type is not displayed on the screen. Press Enter when you are finished; you must type the password again for verification. Passwords are not case-sensitive upon entry.

If you previously had set a power-on access password and want to remove it, select **Remove Power-On Access Password**.

Note: If you forget the power-on access password, the battery must be removed for longer than 30 seconds to reset the NVRAM. The system unit power cable must be disconnected before removing the battery.

A password becomes effective only after the system is turned off and back on again.

Unattended Start Mode:

Note: Unlike other systems, unattended start mode is not automatically disabled when the power-on access password is removed.

Use this option to instruct the service processor to immediately power-on the server after a power failure, bypassing power-on password verification. Unattended start mode can also be set using system management services menus. Unattended start mode can be used on servers that require automatic power-on after a power failure.

Set Privileged-Access Password

The privileged-access password protects against the unauthorized starting of the system programs.

Attention: If the privileged-access password has been enabled, you are asked for the privileged-access password at startup every time you boot your system.

If you previously had set a privileged-access password and want to remove it, select **Remove Privileged-Access Password**.

SCSI Spin Up

Selecting this utility allows you to adjust the hard disk spin-up delay in your system unit.

Display Error Log

Use this option to view or clear your system unit's error log. A screen similar to the following displays when you select this option.

```
.-------------------------------------------------------.
|                    Error Log                          |
|                                                       |
|          Date       Time       Error Code      Location |
|  Entry 1. 01/04/96   12:13:22   25A80011        00-00  |
|  Entry 2. no error logged                             |
`-------------------------------------------------------'


  .-----------------.                          .------.
  |C=Clear Error Log|                          |X=Exit|
  `-----------------'                          `------'
```

Note: The time stamp in his error log is Coordinated Universal Time (UCT), which is also referred to as Greenwich Mean Time (GMT). AIX error logs have more information available and can time stamp with your local time.

Remote Initial Program Load Setup

This option allows you to enable and set up the remote startup capability of your system unit. You must first specify the network parameters.

```
Network Parameters

 1. IP Parameters
 2. Adapter Parameters
 3. Ping



                                                .------.
                                                |X=Exit|
                                                `------'

===>
```

Selecting the IP (Internet Protocol) parameters option displays the following screen.

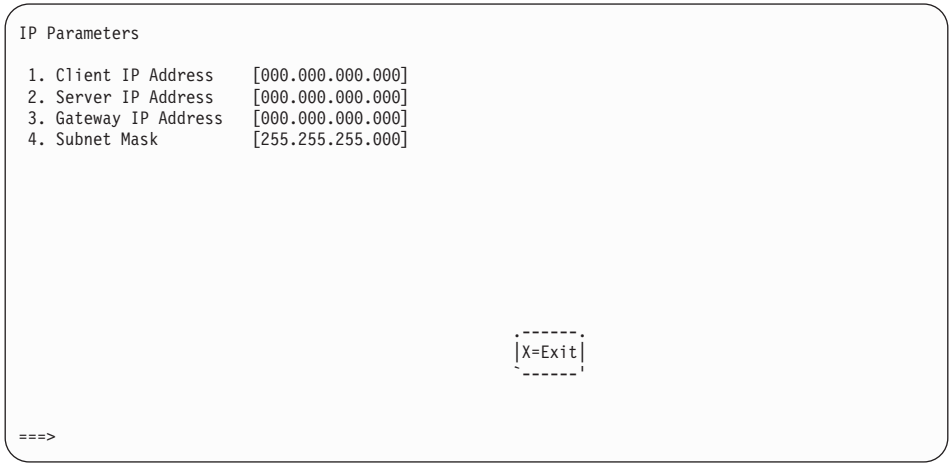
IP Parameters
1. Client IP Address [000.000.000.000]
2. Server IP Address [000.000.000.000]
3. Gateway IP Address [000.000.000.000]
4. Subnet Mask [255.255.255.000]
X=Exit
===>

To change IP parameters, type the number of the parameters for which you want to change the value.

Attention: If the client system and the server are on the same subnet, set the gateway IP address to [0.0.0.0].

Selecting the Adapter Parameters option allows you to view an adapter's hardware address, as well as configure network adapters that require setup. A screen similar to the following displays.

```
Device                    Slot              Hardware Address

1. ethernet               3                 0004AC5E08D2
2. token-ring             5                 0020357A0530
3. ethernet            Integrated           0004ACE4020B




                                                .------.
                                                |X=Exit|
                                                `------'

(Press enter after making selection)                          ===>
```

Selecting an adapter on this screen displays configuration menus for that adapter:

```
10/10c ethernet TP PCI Adapter


1. Data Rate           [Auto]
2. Full Duplex         [Auto]





                                                  .------.
                                                  |X=Exit|
                                                  `------'
```

Selecting the **Data Rate** option allows you the change the media employed by the Ethernet adapter:

```
                .----------------.
                | DATA RATE      |
                | 1. 10 Mbps     |
                | 2. 100 Mbps    |
                | 3. Auto        |
                `----------------'



===>
```

Selecting the **Full Duplex** option allows you to change how the Ethernet adapter communicates with the network:

```
                .----------------.
                | Full Duplex    |
                | 1. Yes         |
                | 2. No          |
                | 3. Auto        |
                `----------------'



===>
```

Select **Ping**, from the Network Parameters Menu, to test a connection to a remote system unit. After selecting the ping o

Option, you must choose which adapter communicates with the remote system.

```
Device                    Slot              Hardware Address

1. ethernet               3                 0004AC5E08D2
2. token-ring             5                 0020357A0530
3. ethernet Integrated                      0004ACE4020B




                                                .------.
                                                |X=Exit|
                                                `------'


(Press enter after making selection)                          ===>
```

After choosing which adapter to use to ping the remote system, you must provide the addresses needed to communicate with the remote system.

```
Ping IP Address

 1. Client IP Address    [129.132.4.20]
 2. Server IP Address    [129.132.4.10]
 3. Gateway IP Address   [129.132.4.30]
 4. Subnet Mask          [255.255.255.0]









      .---------.                                 .------.
      |E=Execute|                                 |X=Exit|
      `---------'                                 `------'

===>
```

Change SCSI ID

This option allow you to view and change the addresses of the SCSI controllers attached to your system unit.

Update System or Service Processor Firmware

ATTENTION: The system management service firmware update utility does not support the combined image update process. It is recommended only for those systems that cannot boot AIX. Detailed instructions on using the system management utilities to update system and servoce processor firmware can be obtaine from the RS/6000 support web site: http://www.rs6000.ibm.com/support/micro.

If you are not able to obtain firmware update images or instructions from this web site, contact your service representative.

If the firmware update image is available on your network on another system, please see appendix C, ″Firmware Updates″, for instructions on updating the system and service processor firmware using a combined image from the AIX command line.r

Firmware Recovery

For instructions on firmware recovery, go to “Firmware Recovery” on page 207.

Select Console

The Select Console Utility allows the user to select which console the user would like to use to display the SMS Menus. This selection is only for the system management service menus and does not affect the display used by the AIX operating system.

Follow the instructions that display on the screen. Pressing 1 after the word keyboard appears but before the tone sounds will take you back into the System Management Services Main Menu.

Select Language

This option allows you to change the language used for the text-based System Management Services screens.

```
SELECT LANGUAGE

 1.  English
 2.  Francais
 3.  Deutsch
 4.  Italiano
 5.  Espanol
 6.  Svenska


====>                                                  .------.
                                                       |x=Exit|
                                                       `------'
```

Note: Your ASCII terminal must support the ISO-8859 character set to properly display languages other than English.

Open Firmware

To enter the open firmware command line, press the number 8 key *after* the keyboard text symbol displays during startup and before the tone sounds. If you have pressed the number 8 key, the open firmware command line (an OK prompt) displays after the initialization and power-on self tests (POST) are complete. The open firmware command line can be used to set up adapters that are not configurable with the System Management Services. Your adapter documentation directs you to use this option if it is needed.

If you have pressed the F8 key, the open firmware command line (an OK prompt) displays after the initialization and power-on self test (POST) are complete.

Note: If you have installed a privileged-access password, you are prompted for this password before you gain access to the open firmware command line.

Chapter 9. Removal and Replacement Procedures

Before performing any of the removal or replacement procedures in this chapter, read the following notice.

DANGER

An electrical outlet that is not correctly wired could place hazardous voltage on metal parts of the system or the devices that attach to the system. It is the responsibility of the customer to ensure that the outlet is correctly wired and grounded to prevent an electrical shock.

Before installing or removing signal cables, ensure that the power cables for the system unit and all attached devices are unplugged.

When adding or removing any additional devices to or from the system, ensure that the power cables for those devices are unplugged before the signal cables are connected. If possible, disconnect all power cables from the existing system before you add a device.

Use one hand, when possible, to connect or disconnect signal cables to prevent a possible shock from touching two surfaces with different electrical potentials.

During an electrical storm, do not connect cables for display stations, printers, telephones, or station protectors for communications lines.
D05

CAUTION:
This product is equipped with a three-wire power cable and plug for the user's safety. Use this power cable with a properly grounded electrical outlet to avoid electrical shock.
C01

Handling Static-Sensitive Devices

Attention: Adapters, planars, diskette drives, and disk drives are sensitive to static electricity discharge. These devices are wrapped in antistatic bags, as shown in this illustration, to prevent this damage.

Take the following precautions:

- If you have an antistatic wrist strap available, use it while handling the device.
- Do not remove the device from the antistatic bag until you are ready to install the device in the system unit.
- With the device still in its antistatic bag, touch it to a metal frame of the system.
- Grasp cards and boards by the edges. Hold drives by the frame. Avoid touching the solder joints or pins.
- If you need to lay the device down while it is out of the antistatic bag, lay it on the antistatic bag. Before picking it up again, touch the antistatic bag and the metal frame of the system unit at the same time.
- Handle the devices carefully in order to prevent permanent damage.

Stopping the System Unit

Attention: When using the shutdown procedure for your system, follow the correct shutdown procedure before you stop the system unit. Failure to do so may result in the loss of data.

1. At a command line, type `shutdown` to stop the operating system.The system unit is powered down by the shutdown procedure.
2. After you shut down the operating system, set the power switches of any attached devices to Off.
3. Unplug the system.

   Note: Standby power is applied to the service processor until the power cord is disconnected.

Procedure List

The following removal and replacement procedures are discussed in this chapter:

- Adapters: Go to “Adapters” on page 242.
- Battery: Go to “Battery Replacement” on page 248.
- CD-ROM, Tape Drive, Diskette Drive: Go to “CD-ROM Drive, Tape Drive, Diskette Drive” on page 268.
- CEC Fan: Go to “CEC Fan” on page 264.
- Configuration or Unconfiguration of Media Drives: Go to “Configuration or Unconfiguration of Disk Drives” on page 247.
- Covers: Go to “Covers” on page 226.
- Disk Drive Cage: Go to “Disk Drive Cage” on page 266.

- Internal Drives: Go to “Internal Drives” on page 244.
- I/O Board: Go to “I/O Board” on page 254.
- I/O Fan: Go to “I/O Fan” on page 265.
- Memory Cards: Go to “Memory Cards” on page 232.
- Memory Modules: Go to “Memory Modules” on page 236.
- Operator Panel: Go to “Operator Panel” on page 260.
- Power Supply: Go to “Power Supply” on page 257.

- Processor Card: Go to “Processor Card” on page 239.
- Processor and Memory Card Cover: Go to “Removal of Processor and Memory Card Cover” on page 231.
- System Board: Go to “System Board” on page 252.

Covers

This section covers removal and replacement of covers.

Removal of Covers

1. If you have not already done so, shut down the system as described in “Stopping the System Unit” on page 224.
2. To remove the front cover, grasp the front cover at the top and bottom as shown. To ease removal, pull the cover out at the bottom first.

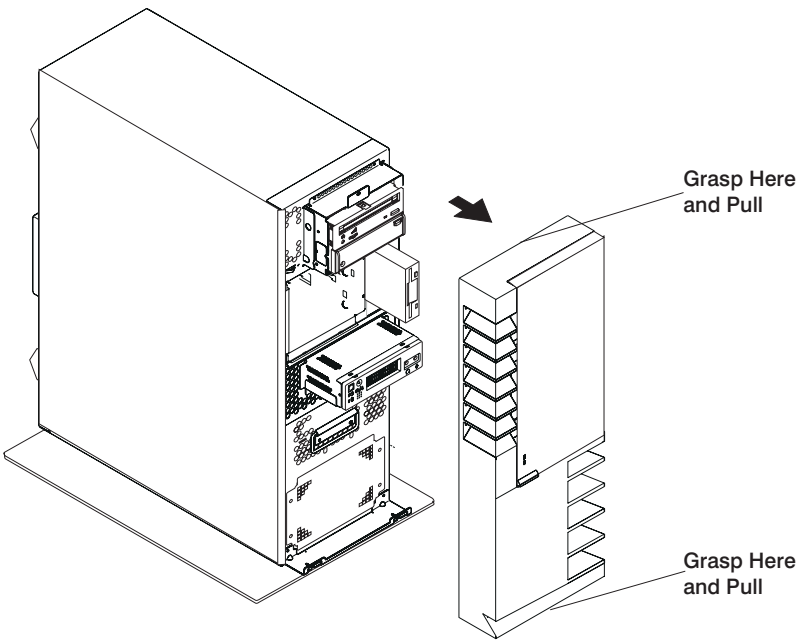

3. To remove the rear cover, lift the cover up and away from the system.

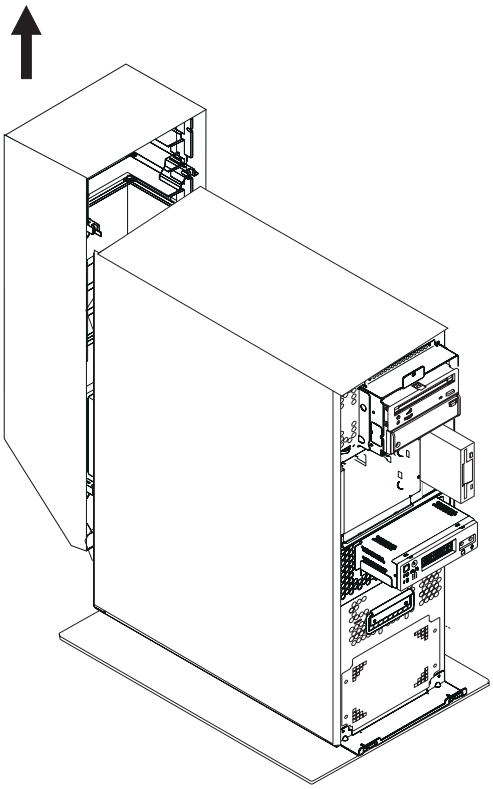

4. To remove the side covers, do the following:
   a. Remove the screws that hold the side covers to the rear frame.

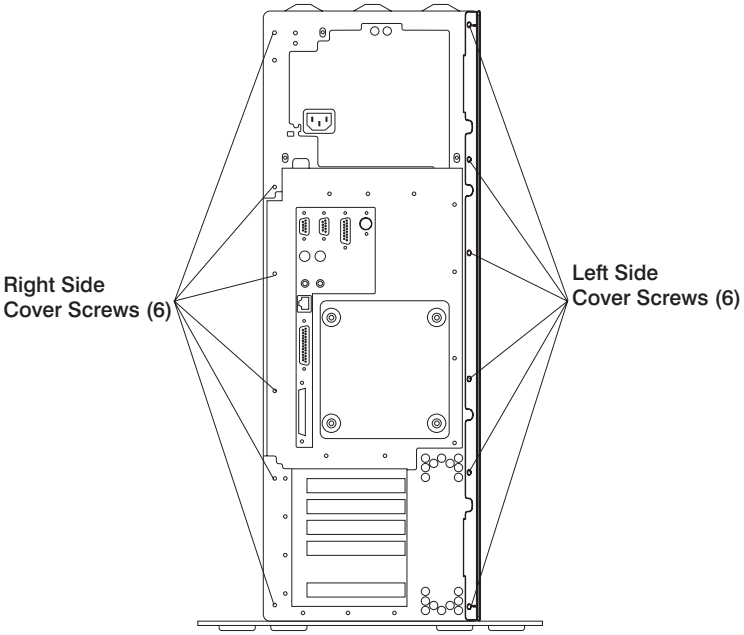

Note: The left and right side covers are interchangable, but should not be switched because the left side cover contains a reference diagram.

b. Slide the covers to the rear and remove.

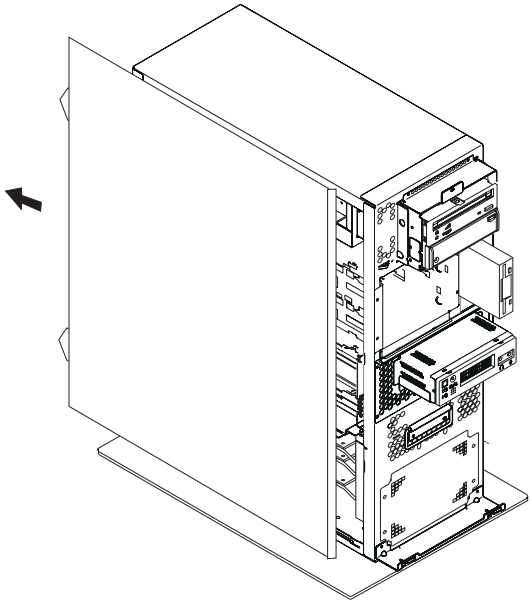

5. To remove the top cover, remove the screw at the front and the three screws at the rear and lift the cover off. (The side covers must have been removed previously.)

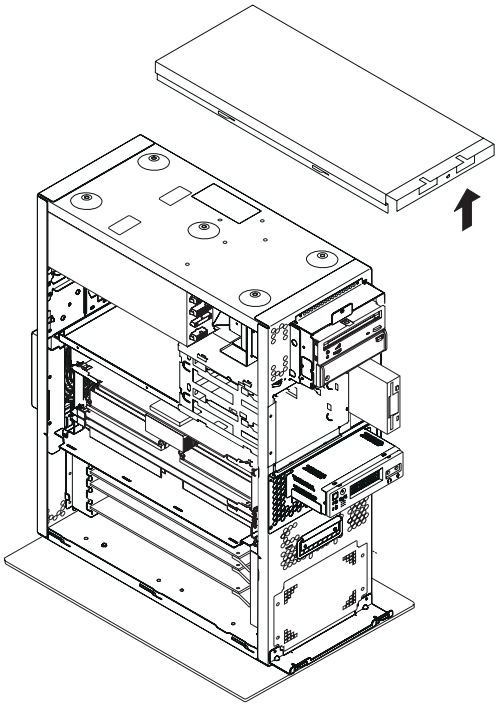

Replacement of Covers

1. To replace the top cover, place the cover on top of the system and secure with the screws removed earlier.
2. To replace the side covers, do the following:
   a. Insert the tabs on the side covers into the slots on the enclosure.
   b. Slide the covers toward the front of the enclosure until it latches into place.
   c. Secure the rear of the covers with the screws removed earlier.
3. To replace the front cover, align the tabs on the front cover with the slots on the system unit enclosure. Insert the front cover until it is secure.
4. To replace the rear cover, align the tabs on the side covers with the slots on the rear cover and slide the cover down until it latches into place.

Processor and Memory Card Cover

This section covers removal and replacement of processor and memory card cover.

Removal of Processor and Memory Card Cover

1. If you have not already done so, shut down the system as described in “Stopping the System Unit” on page 224.
2. If you have not already done so, unplug the system unit power cable from the electrical outlet.
3. If you have not already done so, remove the front, rear, and left side covers as described in “Removal of Covers” on page 226.
4. Remove the thumbscrew securing the processor and memory card cover, and remove the cover.

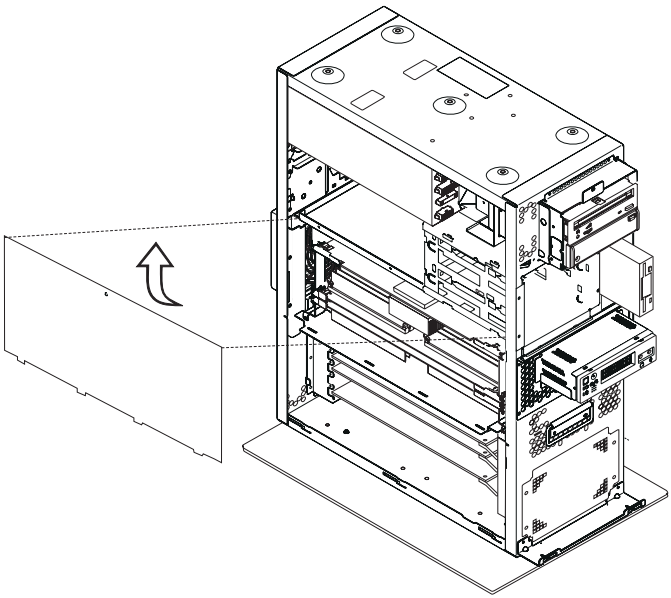

Replacement of Processor and Memory Card Cover

To replace the processor and memory card cover, perform the removal steps in the reverse order.

Memory Cards

This section covers the removal and replacement of memory cards.

Removal of Memory Cards

1. If you have not already done so, shut down the system as described in “Stopping the System Unit” on page 224.
2. If you have not already done so, unplug the system unit power cable from the electrical outlet.
3. If you have not already done so, remove the front, rear, and left side covers as described in “Removal of Covers” on page 226.
4. Remove the processor and memory card cover as described in “Removal of Processor and Memory Card Cover” on page 231.
5. Remove the memory card shield from in between the two memory cards.
6. The card is secured in place with camming latches at corners of the memory card. Open the card camming latches.

   Attention: To prevent damage to the card and to the card connectors, open or close both camming latches at the same time.

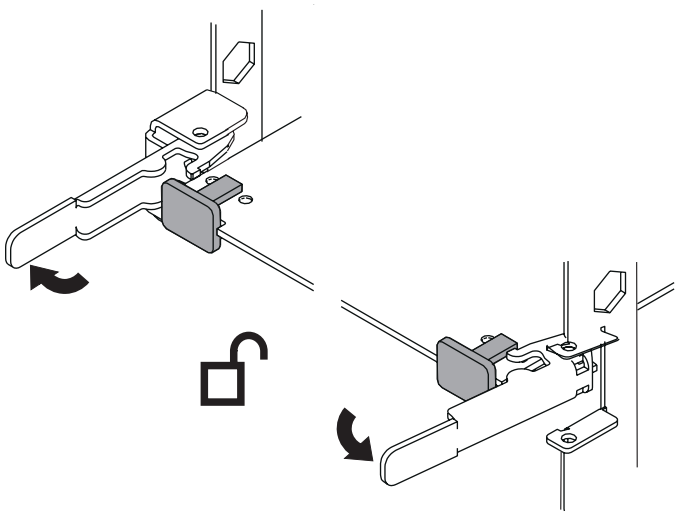

7. Remove the memory card by pullling it straight out of the system unit.

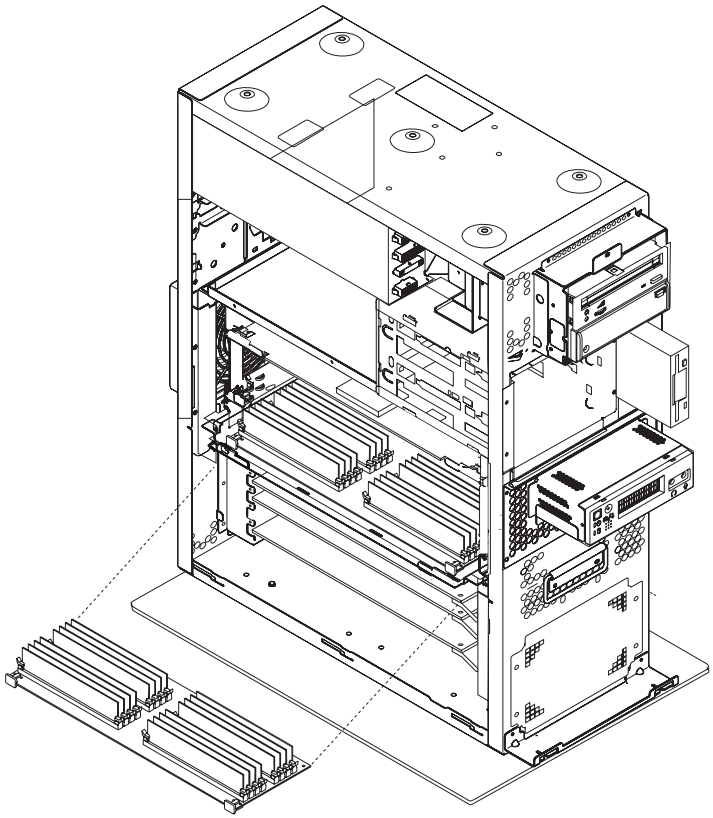

Replacement of Memory Cards

1. With one hand, touch any metal surface of the chassis to minimize static electrical charges, and then pick up the memory card.
2. Open the camming latches.
3. Make sure that the camming latches are in the unlocked position.
4. If only one memory card is installed, it should be installed in the primary slot 1 (J3) with the card **face up**.
5. If a second memory card is installed, it should be installed in the secondary slot 2 (J2) with the card **face down**.

Attention: To prevent damage to the card and to the card connectors, open or close both camming latches at the same time.

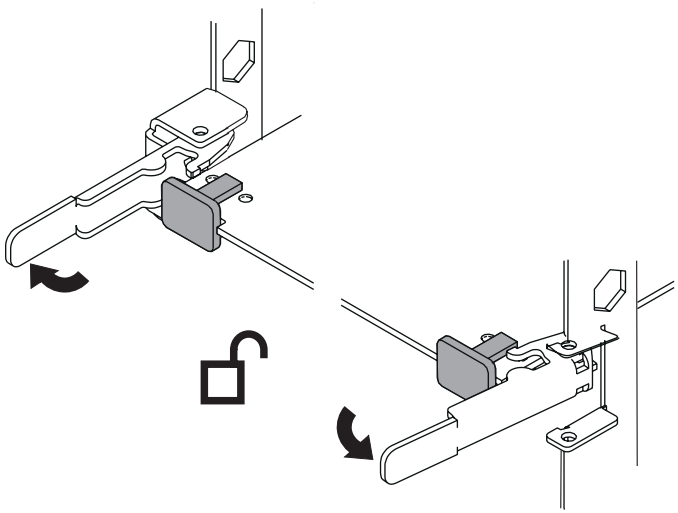

6. Place the memory card into the card guide rails.
7. Align the card with the connector.
8. Firmly insert the card into the connector.

9. Close the camming latches to secure the card into the connector.

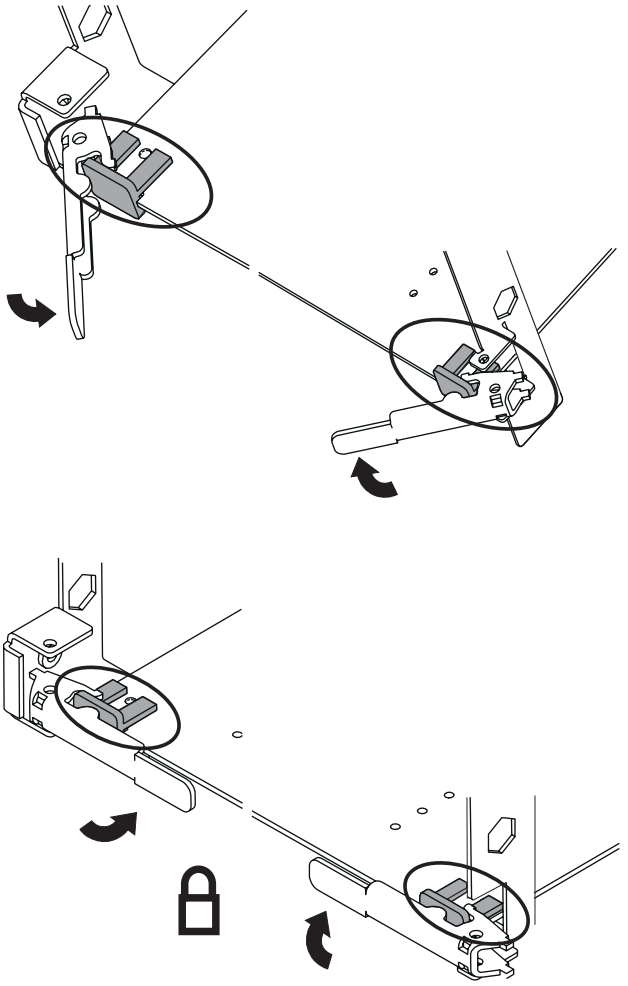

10. Make sure that the tabs on the new card are captured by the latches.

    Note: Push the card in with your thumb to make sure that the card is seated properly.

11. Install the memory card shield between the two memory cards.
12. Replace the processor and memory card cover as described in “Replacement of Processor and Memory Card Cover” on page 231.
13. Replace the system unit covers as described in “Replacement of Covers” on page 230.

Memory Modules

This section covers removal and replacement of memory modules.

Removal of Memory Modules

1. If you have not already done so, shut down the system as described in “Stopping the System Unit” on page 224.
2. If you have not already done so, unplug the system unit power cable from the electrical outlet.
3. If you have not already done so, remove the front, rear and left side covers as described in “Removal of Covers” on page 226.
4. If you have not already done so, remove the processor and memory card cover as described in “Removal of Processor and Memory Card Cover” on page 231.
5. If you have not already done so, remove the memory card as described in “Removal of Memory Cards” on page 232.
6. Locate the memory module connectors and determine which module you want to remove.

   Note: Memory modules must be removed in pairs and in the correct slot configuration. (Slots J1 and J2, J3 and J4, J5 and J6, and so on.)

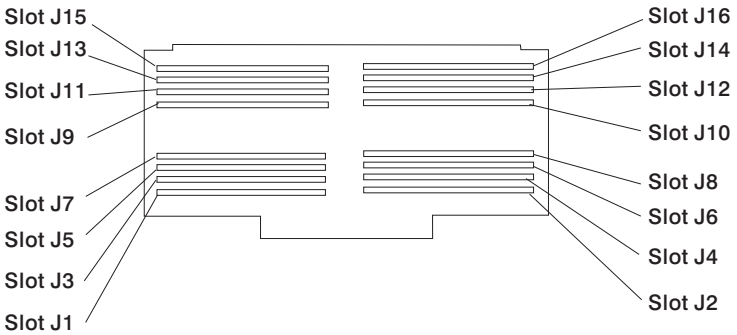

7. Remove the memory module by pushing the tabs out on the memory connectors.

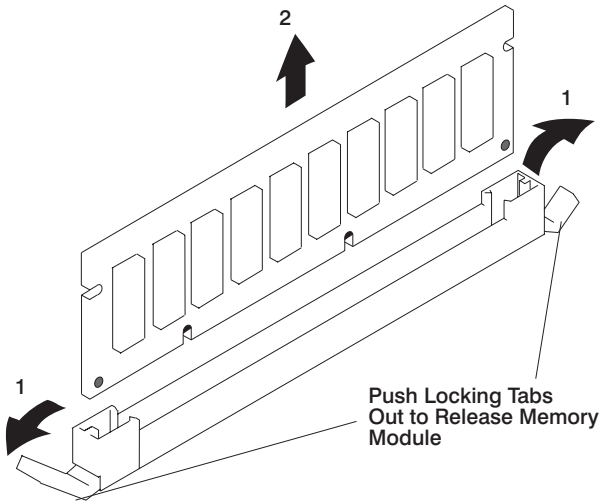

Replacement of Memory Modules

1. With one hand, touch any metal surface of the chassis to minimize static electrical charges, and then pick up the memory module.
2. Locate the memory module connector on the memory card.

   Note: Memory modules must be installed in pairs and in the correct slot configuration. (Slots J1 and J2, J3 and J4, J5 and J6, and so on.)
3. Insert the memory module firmly into the connector.

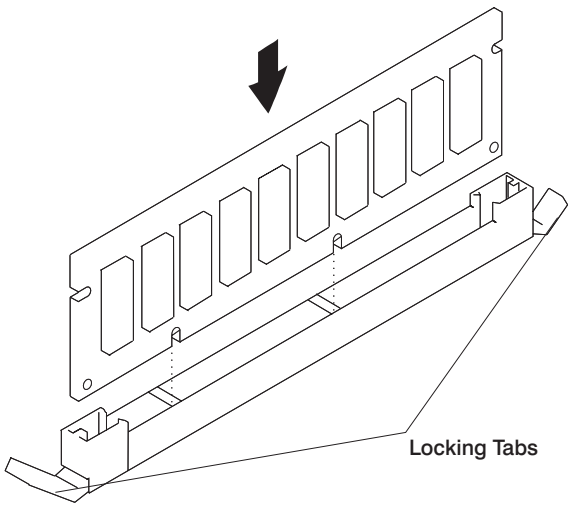

4. Secure the memory module with the locking tabs located at each end of the connector.
5. Replace the memory card into the system unit. See “Replacement of Memory Cards” on page 233 for more information.
6. Replace the processor and memory card cover as described in “Replacement of Processor and Memory Card Cover” on page 231.
7. Replace the system unit covers as described in “Replacement of Covers” on page 230.

Processor Card

This section covers the removal and replacement of a processor card.

Removal of Processor Card

Attention: When you remove a card make sure that you do not let it come into contact with the card below it.

1. If you have not already done so, shut down the system as described in “Stopping the System Unit” on page 224.
2. If you have not already done so, unplug the system unit power cable from the electrical outlet.
3. If you have not already done so, remove the front, rear, and left side covers described in “Removal of Covers” on page 226.
4. Remove the processor and memory card cover as described in “Removal of Processor and Memory Card Cover” on page 231.
5. The processor card is secured in place with card camming latches, one on each end of the card. Open the card camming latches.

   Attention: To prevent damage to the card and the card connectors, open or close the camming latches at the same time.

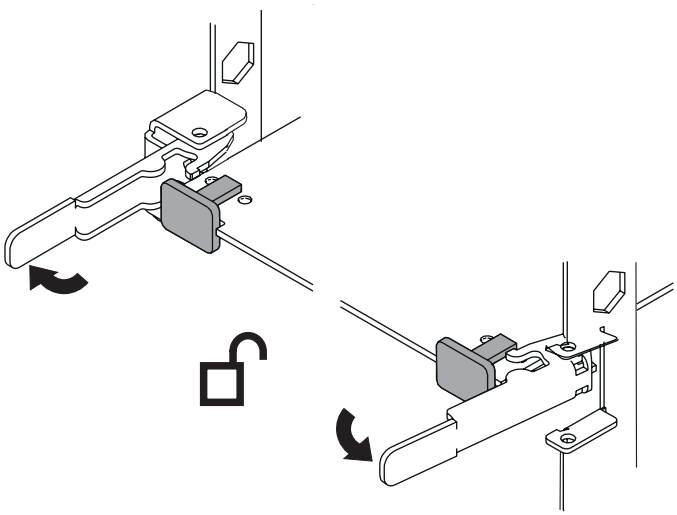

6. Remove the card from the connector. Be sure to store the processor card in a safe place.

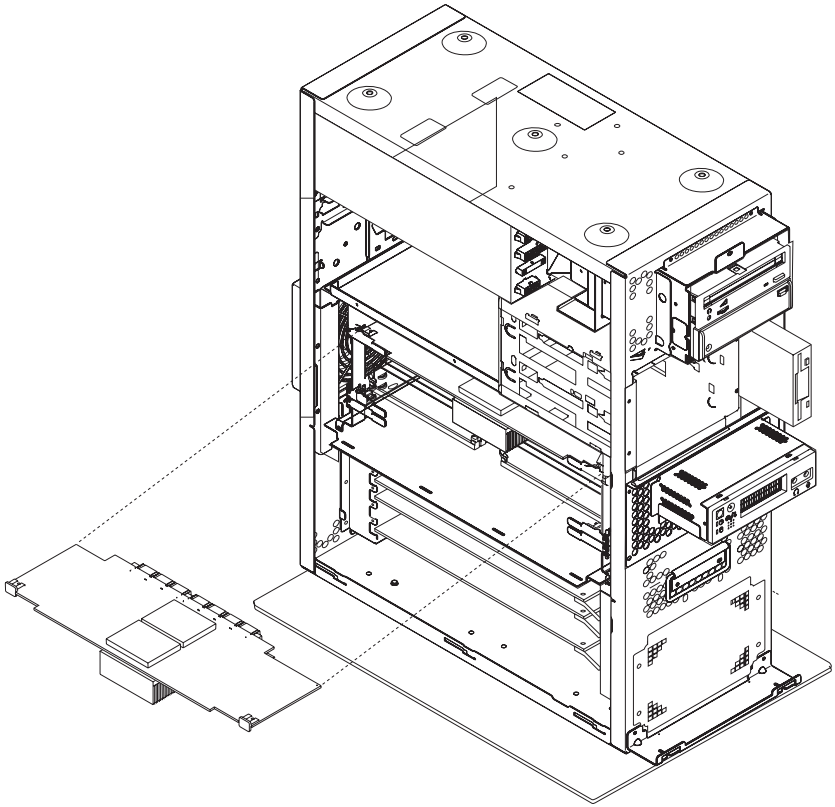

Replacement of Processor Card

Installing a processor card into your system unit may require updating the firmware. Go to Appendix C, “Firmware Updates,” on page 287.

Attention: Both processor cards must be of the same speed.

1. If you have not already done so, open the card camming latches on both ends of the card connector.

   Attention: When you remove a card make sure that you do not let it come into contact with the card below it.
2. Place the processor card in the processor card guide rails.
3. Carefully align the processor card with the card connector.
4. Firmly insert the processor card into the card connector.

5. Close the camming latches to secure the processor card.

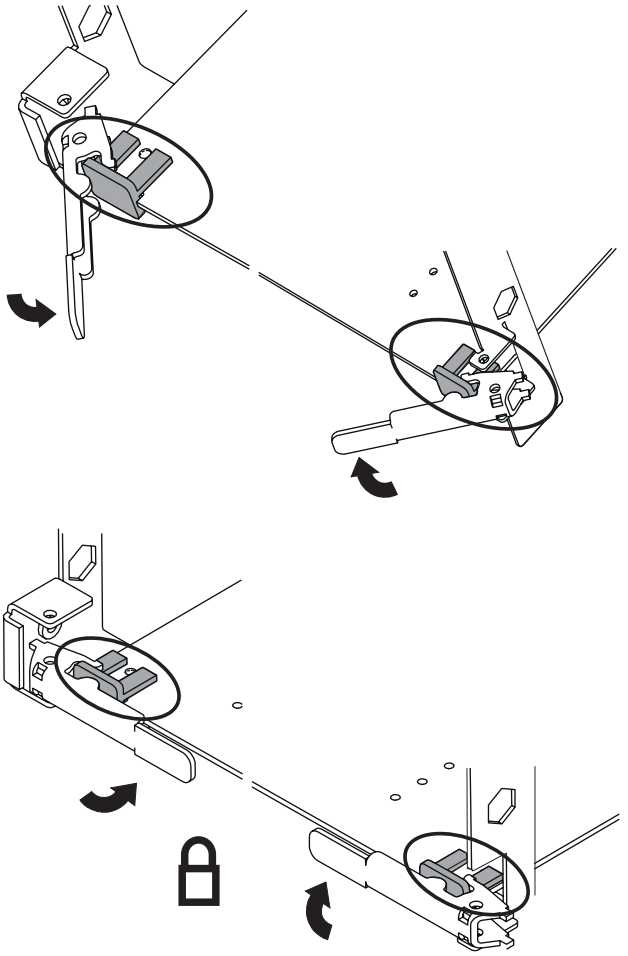

6. Push the card in with your thumb to make sure the card is **fully** seated.
7. Install the memory card shield between the two memory cards if the cards were removed during the processor card removal procedure.
8. Replace the processor and memory card cover as described in “Replacement of Processor and Memory Card Cover” on page 231.
9. Replace the system unit covers as described in “Replacement of Covers” on page 230.

Adapters

This section covers the removal and replacement of adapters.

Removal of Adapters

This section covers the removal of adapters.

1. If you have not already done so, shut down the system as described in “Stopping the System Unit” on page 224.
2. If you have not already done so, unplug the system unit power cable from the electrical outlet.
3. If you have not already done so, remove the front, rear, and left side covers as described in “Removal of Covers” on page 226.
4. Record the slot number and location of the adapter being removed.
5. Label any cables attached to the adapter being removed.
6. Disconnect any cables that are connected to the adapter being removed.
7. Remove the screw that holds the adapter bracket to the system unit.
8. Remove the adapter from the system unit.
9. If you are not installing another adapter in this slot location, replace the expansion slot cover. Slide the cover over the expansion slot and tighten the screw on the top of the expansion slot cover.

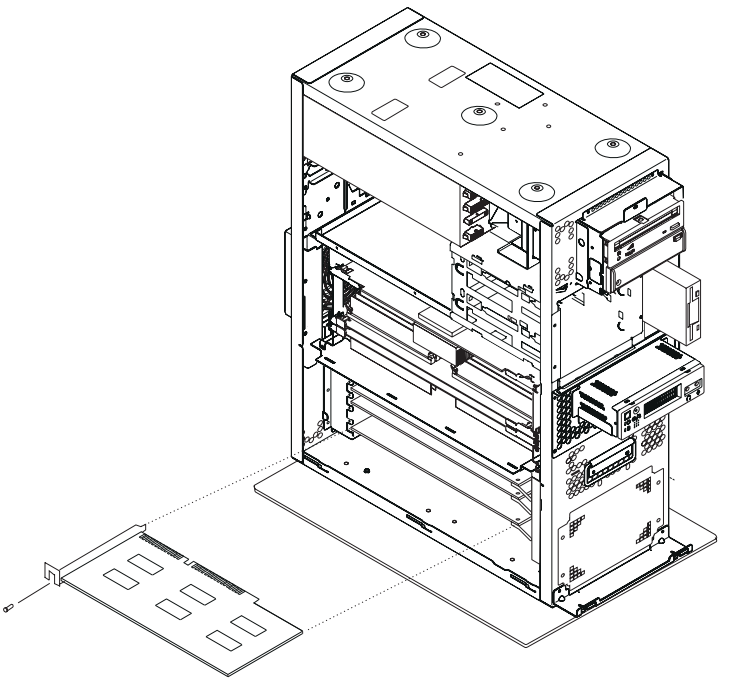

Replacement of Adapters

This section covers the replacement of adaters.

1. If you have not already done so, shut down the system as described in “Stopping the System Unit” on page 224.
2. If you have not already done so, unplug the system unit power cable from the electrical outlet.
3. If you have not already done so, remove the front, rear, and left side covers as described in “Removal of Covers” on page 226.
4. Carefully grasp the adapter by the edges and align the adapter with the expansion-slot connector.
5. Press the adapter firmly into the expansion-slot connector.
6. Use the screw you removed earlier from the expansion-slot cover to secure the adapter card bracket to the system unit.
7. Connect any cables you removed earlier to the adapter.
8. Replace the system unit covers as described in “Replacement of Covers” on page 230.

Internal Drives

The RS/6000 44P Series Model 270 has five internal media bays:

- One 3.5 inch diskette bay
- Two 5.25 inch media bays, for CD-ROM drives, tape drives, or disk drives.
- Two 3.5 inch disk drive bays.

A diskette drive and CD-ROM drive are preinstalled in all systems.

Checklist For Handling Drives

Consider the following cautions when installing or removing media drives into your system unit:

- Use caution when handling all disk drives. Disk drives are more likely to be damaged during installation and service than at any other time. A fall of as little as .25 inch, bumping, or rough handling can all cause latent failures.
- Media drives are particularly sensitive to electrostatic discharge. Follow the electrostatic handling procedures described in “Handling Static-Sensitive Devices” on page 224 prior to handling the media drive.
- Refer to the documentation provided with your drive to determine if any drive-specific procedures must be followed, such as setting switches or jumpers, or attaching the drive to a carrier tray.
- Media SCSI drives must have their SCSI address set manually. Refer to the documentation provided with your drive for more information on setting the SCSI address. Refer to “SCSI IDs and Bay Locations” on page 6 for more information on SCSI addresses in your system unit.

Disk Drives

This section covers removal and replacement of disk drives.

Removal of Disk Drives

1. Unconfigure the drive you want to remove. See “Unconfiguration of Disk Drives” on page 247 for instructions.
2. If you have not already done so, shut down the system as described in “Stopping the System Unit” on page 224.
3. If you have not already done so, remove the front cover as described in “Covers” on page 226.
4. If the system has a padlock or cable securing the disk drive cage, remove the padlock or cable.
5. Loosen the retaining screw that secures the disk drive cage cover to the disk drive

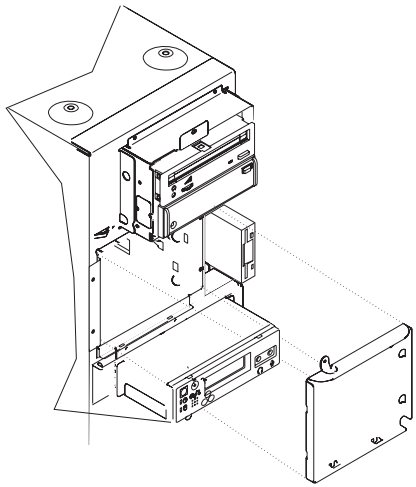

   cage and remove the cover.
6. Locate the drive you want to remove.
7. Pull the disk drive lever toward you and remove the drive unit from the system unit.

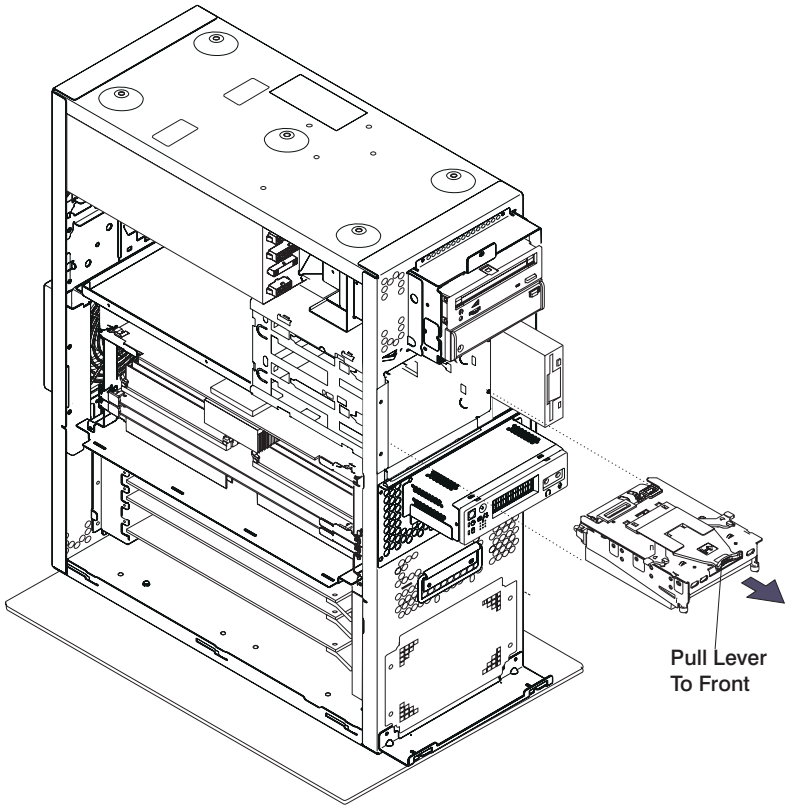

Note: On a new hard drive, pull the lever to the front before installing. Ignore the arrow printed on the top of the lever that points to the right.

Replacement of Disk Drives

1. Align the drive with the disk drive cage rails.
2. Slide the drive into the system unit until it connects with the backplane at the rear of the drive bay.
3. Configure the drive using **SMIT**. Then wait five minutes for the drive to warm up. See “Configuration of Disk Drives” on page 247 for instructions on configuring the drive.

Configuration or Unconfiguration of Disk Drives

Use the procedures in this section to configure or unconfigure a media drive.

Configuration of Disk Drives

If you need to configure a disk drive, use the following procedure:

1. Log in as root user.
2. Enter the **SMIT** command.
3. Select **Devices**.
4. Determine the type of disk drive you want to configure. Select that type of drive from the menu.
5. Select **Add** a *drive type*, where *drive type* is the type of drive you are configuring.
6. A list displays, listing various models of the drive type you selected. Select the specific type of drive you are adding.

Unconfiguration of Disk Drives

1. Log in as root user.
2. Enter the **SMIT** command.
3. Select **Devices**.
4. Determine the type of disk drive you want to remove or unconfigure. Select that type of drive from the menu.
5. For the Keep Definition option, select **Yes**. This selection retains the details of the drive in the device configuration database.
6. A list displays listing various models of the drive type you selected. Select the specific type of drive you are removing or unconfiguring.
7. Select the **Do** option to unconfigure the drive.

Battery Replacement

CAUTION:
A lithium battery can cause fire, explosion, or a severe burn. Do not recharge, disassemble, heat above 100°C (212°F), solder directly to the cell, incinerate, or expose cell contents to water. Keep away from children. Replace only with the part number specified for your system. Use of another battery may present a risk of fire or explosion.

The battery connector is polarized; do not attempt to reverse polarity.

Dispose of the battery according to local regulations.

To replace the battery, do the following:

1. Shut down the system unit as described in “Stopping the System Unit” on page 224.
2. Unplug the power cable.
3. Remove the left-side cover as described in “Removal of Covers” on page 226.
4. Remove the cover support bridge as described in “Processor and Memory Card Cover” on page 231.

5. Locate the battery on the system board.

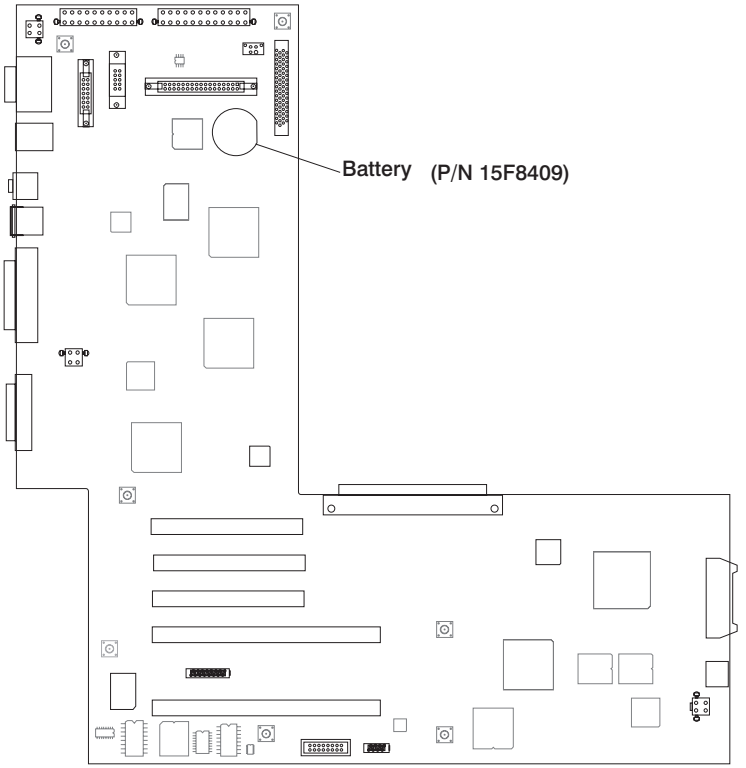

6. If needed, remove any adapters mounted in the top two adapter slots as described in “Removal of Adapters” on page 242.

7. Pry the battery out of its mount using your fingernail or small blunt object. After the top of the battery has cleared the plastic mount, pull it up and out of the system unit.

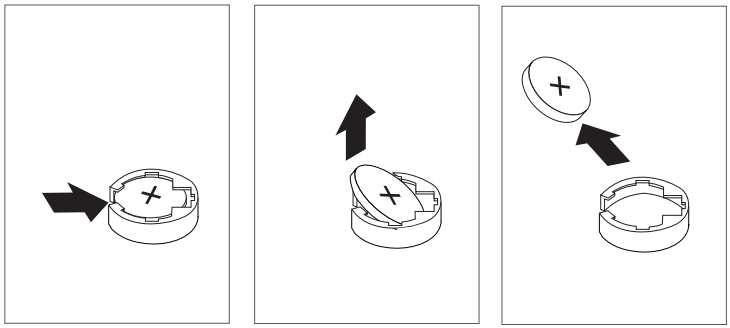

Note: You may need to pry the battery out of the mount after the top of the battery has cleared the battery mount. *Do not* wiggle the plastic mount from side to side or try to separate the plastic battery mount from the system board. The plastic mount connections are soldered to the system board. Permanent damage can result to the system board if the battery mount is damaged or removed.

8. Ensure that the battery polarity is correct. With the positive (+) side of the battery facing the memory module connectors, insert the battery between the front and rear battery mount clips.

9. Using your thumb, gently press the battery into the battery mount. Use your index finger to support the back of the battery mount during this operation.

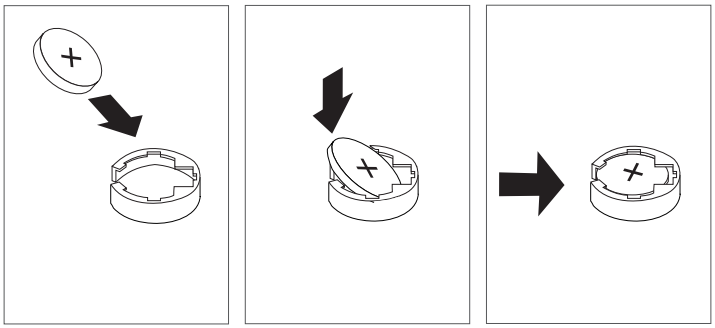

10. Replace any removed adapters as described in “Replacement of Adapters” on page 242.
11. Replace the cover support bridge as described in “Replacement of Processor and Memory Card Cover” on page 231.
12. Replace the left-side cover as described in “Processor and Memory Card Cover” on page 231.
13. Reconnect all removed cables.
14. Turn on the power.
15. Reset the time and date.
16. If you are running AIX, the **bootlist** command may need to be run while logged in as root user. This restores the custom bootlist and allows the option of *Select Software* under multiboot to start the operating system. IP parameters may also need to be rebuilt.

System Board

This section covers removal and replacement of the system board.

Removal of System Board

Attention: Be certain to record the location of any component prior to removal or disconnection. Record the settings of any jumpers on the board prior to removing it from the system unit.

1. If you have not already done so, shut down the system as described in “Stopping the System Unit” on page 224.
2. If you have not already done so, unplug the system unit power cable from the electrical outlet.
3. If you have not already done so, remove the front, rear, and left side covers as described in “Removal of Covers” on page 226.
4. If you have not already done so, remove the processor and memory card cover as described in “Removal of Covers” on page 226.
5. If you have not already done so, remove the disk drive cage as described in “Disk Drive Cage” on page 266.
6. Remove the processor cards from the system unit. Refer to “Removal of Processor Card” on page 239 for more information.
7. Remove the memory cards from the system unit. Refer to “Removal of Memory Cards” on page 232 for more information.
8. Remove the retaining screws that secure the processor and memory card bracket to the system unit.

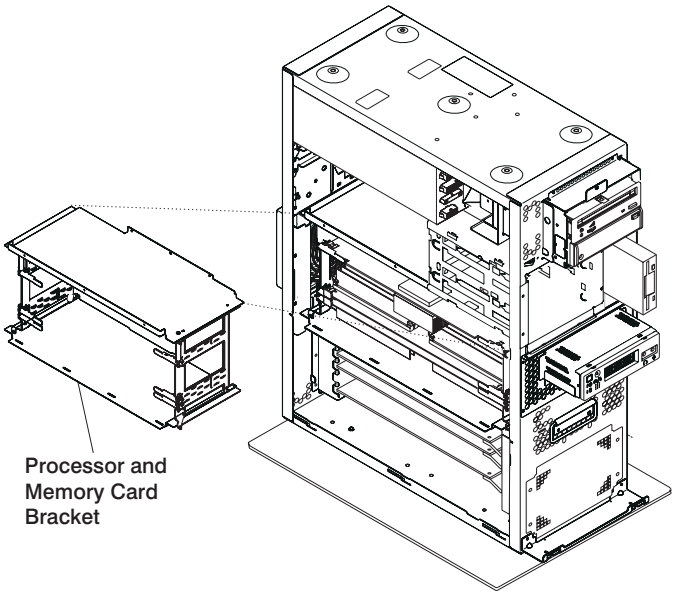

9. Remove the processor and memory card bracket by sliding it straight out and away from the system.
10. Disconnect the power cables from the system board connectors (J5 and J7).
11. Remove the screws that secure the system board to the system unit.
12. Remove the foam air dam and set aside to be replaced later.
13. Slide the system board up to disconnect it from the I/O board.

    Attention: Ensure that you do **not** bend the connector between the system board and the I/O board.

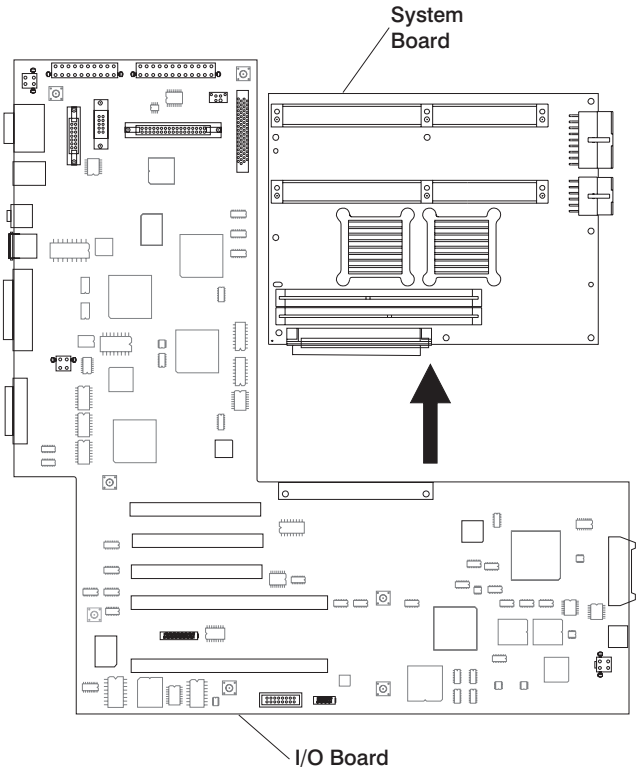

14. Carefully remove the system board from the system unit.

Replacement of System Board

1. To replace the system board, perform the removal steps in the reverse order.
2. Carefully connect the system board and I/O board. Hold the system board in place while inserting the holding screws.
3. Replace the foam air dam.

I/O Board

This section covers removal and replacement of the I/O board.

Removal of I/O Board

1. Be certain to record the location of any component prior to removing or disconnecting it.
2. Record the settings of any jumpers on the board prior to removing it from the system unit.
3. If you have not already done so, shut down the system as described in “Stopping the System Unit” on page 224.
4. If you have not already done so, unplug the system unit power cable from the electrical outlet.
5. If you have not already done so, remove the front, rear, and left side covers as described in “Removal of Covers” on page 226.
6. If you have not already done so, remove the system board as described in “Removal of System Board” on page 252.
7. Remove the I/O fan as described in “I/O Fan” on page 265.
8. Record the location of all cables at the rear of the system unit.
9. Disconnect all cables from the rear of the system unit.
10. Record the location of all adapter cards and remove the adapters from the system unit. Refer to “Removal of Adapters” on page 242 for more information.
11. Record the location of all connectors you will be removing.

12. Disconnect all cables from the connectors on the I/O board.
13. Remove the screws that secure the I/O board connectors to the rear of the system unit.

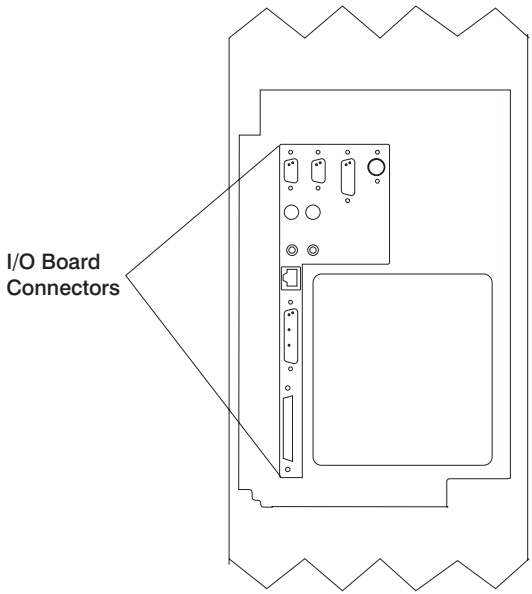

14. Remove the screws that secure the I/O board to the system unit.

15. Remove the I/O board from the system unit by carefully sliding it out and away from the system unit. Ensure that all of the rear connectors on the I/O board clear the system unit frame.

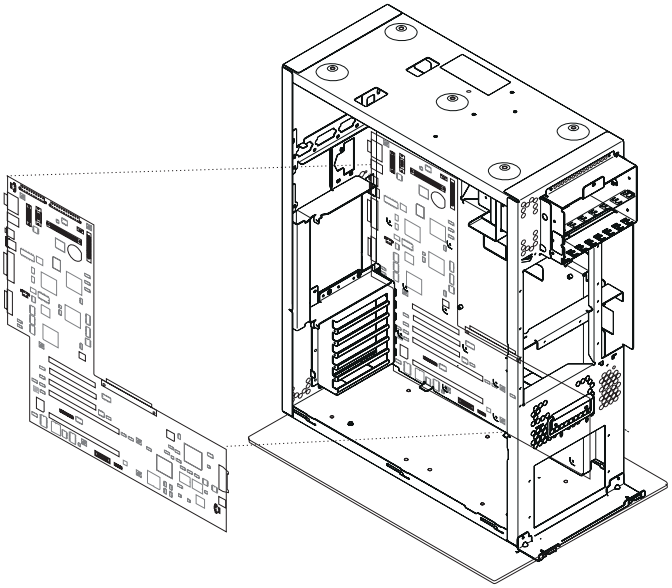

Replacement of I/O Board

To replace the I/O board, perform the removal steps in the reverse order.

Inform the user that he must reconfigure the boot sequence settings, system management service console selection, and the clock.

Power Supply

DANGER

Do not attempt to open the covers of the power supply. Power supplies are not serviceable and are to be replaced as a unit.

Removal of Power Supply

1. If you have not already done so, shut down the system as described in “Stopping the System Unit” on page 224.
2. If you have not already done so, unplug the system unit power cable from the electrical outlet.
3. If you have not already done so, remove all of the covers as described in “Removal of Covers” on page 226.
4. Remove the media devices as described in “CD-ROM Drive, Tape Drive, Diskette Drive” on page 268.
5. Remove the disk drives as described in “Disk Drives” on page 245.
6. Remove the screws that secure the disk drive cage as described in “Removal of Disk Drive Cage” on page 266. Do not disconnect the cables from the backplane. Slide the disk drive cage forward enough so that the power supply can be removed.

7. Disconnect the six power cables from the power supply connectors in the following order (P3, P4, P6, P5, P2, and P1). Ensure that the cables allow clearance for power supply removal.

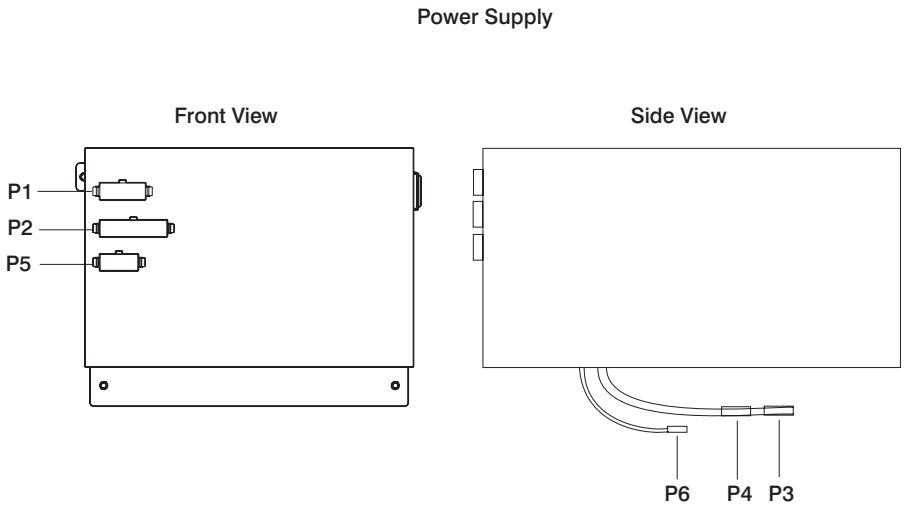

8. Remove the power cables from the I/O board connectors (J16 and J19).
9. Remove the retaining screws that secure the power supply to the rear of the system unit.

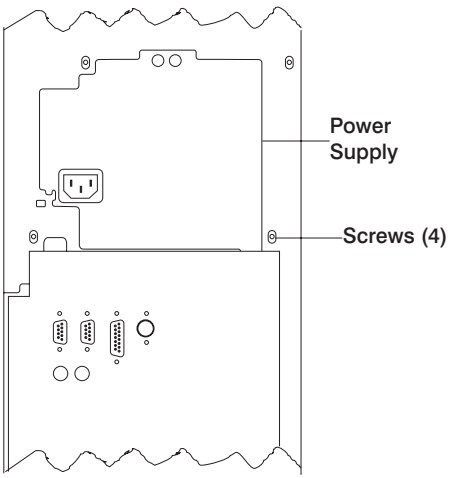

10. Remove the retaining screws that secure the power supply to the top of the system unit.

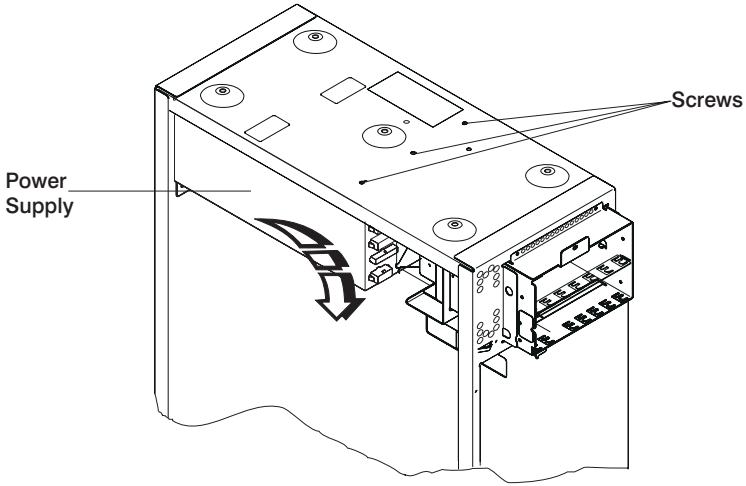

Attention: When you remove the power supply, ensure that the power supply does not drop down and damage the I/O board components or connectors.

11. Slide the power supply slightly toward the front of the system unit to disengage the power supply retainer from the top and right side of the system frame.
12. Carefully remove the power supply from the system unit.

Replacement of Power Supply

To replace the power supply, perform the removal steps in the reverse order. Ensure that the power supply retainer engages with the top and right side of the system frame, to help align the power supply screws correctly.

Operator Panel

This section covers removal and replacement of the operator panel.

Removal of Operator Panel

1. If you have not already done so, shut down the system as described in “Stopping the System Unit” on page 224.
2. If you have not already done so, unplug the system unit power cable from the electrical outlet.
3. If you have not already done so, remove the front cover as described in “Removal of Covers” on page 226.
4. Remove the retaining screws (4) that secure the operator panel to the front of the system unit.

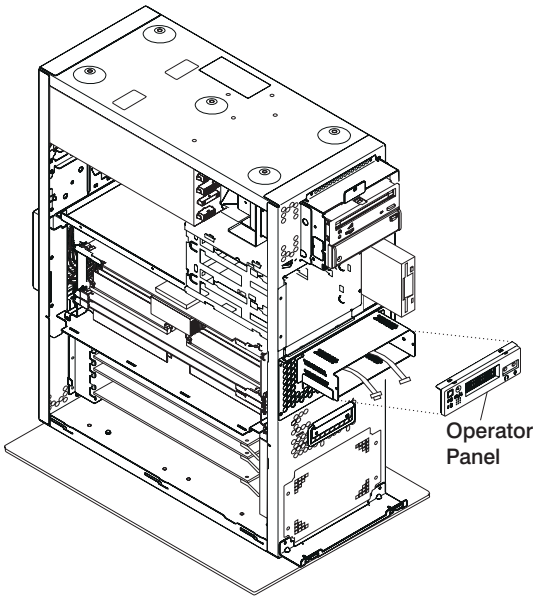

5. Slide the operator panel out from the system unit.
6. Remove the screw that secures the audio cable to the operator panel.
7. Disconnect the cables from the rear of the operator panel.

Replacement of Operator Panel

Perform the removal steps in the reverse order.

Attention: If you are replacing the operator panel with a new FRU, you *must* write the system VPD information (machine type, model number, and serial number). You *must* contact the support center to obtain instructions and the necessary password to enter the information into the VPD module. If you type an incorrect serial number, the operator panel is rendered inoperable and a new operator panel must be ordered.

Note: Refer to "Operator Panel Vital Product Data (VPD) Update Procedure" on page 262 for the correct procedure.

Operator Panel Vital Product Data (VPD) Update Procedure

If you replaced the operator panel with a new FRU, you must perform the following procedure to ensure that the VPD is correct.

1. After installing the new operator panel, plug the system unit's power cable into the electrical outlet. Wait for ″OK″ in the operator panel display.
2. Bring up the **Service Processor Firmware** menu.

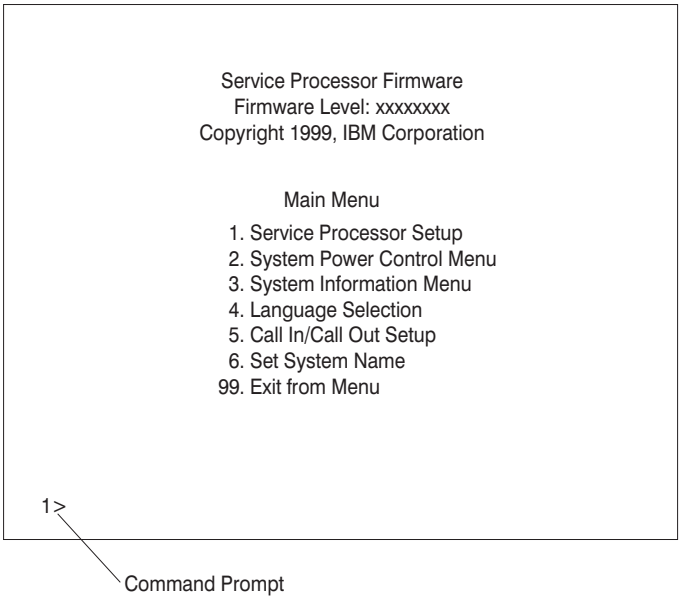

3. At the command prompt, type in the code which accesses the hidden menus. If necessary call your local support center to obtain the code.

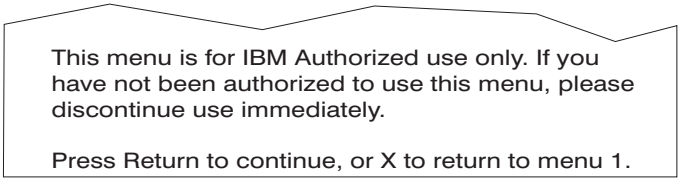

4. Press Enter to continue.

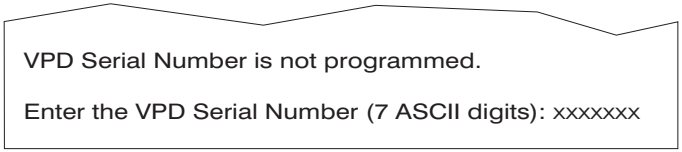

5. Enter the VPD serial number.

   Note: The serial number MUST be entered correctly. Enter the last seven digits only. Do not include the dash (-) in the serial number as a digit. If the serial number is not entered correctly, a new operator panel will need to be ordered and installed.

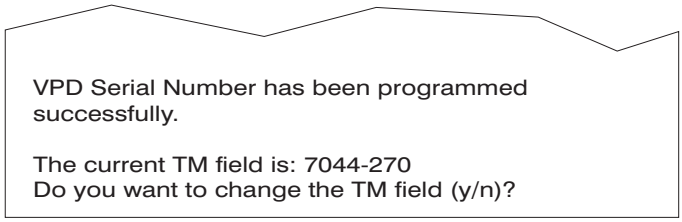

6. Enter yes (y) if the system unit's Type/Model (TM) you are working on is different from the one listed on the screen.
7. Enter the Type and Model number of the system unit.

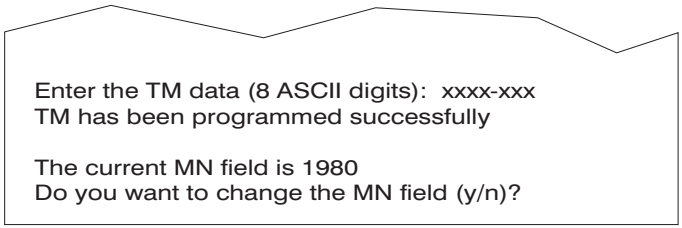

8. The MN field is for manufacturing use only. Enter no (n) to change the MN field.
9. Enter 99 at the command line of the Main Menu to exit.

CEC Fan

This section covers removal and replacement of the CEC fan.

Removal of CEC Fan

1. If you have not already done so, shut down the system as described in “Stopping the System Unit” on page 224.
2. If you have not already done so, unplug the system unit power cable from the electrical outlet.
3. If you have not already done so, remove the front, back and right side covers as described in “Removal of Covers” on page 226.
4. Remove the (11) retaining screws that secure the CEC fan assembly to the system unit.

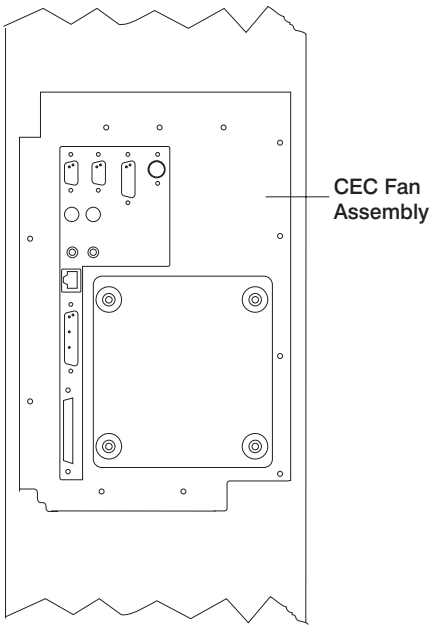

5. Disconnect the fan from the connector in the cable.
6. Pull the CEC fan assembly out from the system unit.

Replacement of CEC Fan

When replacing the CEC fan assembly, insert the left side first to ensure that it is sealed correctly.

Perform the removal steps in the reverse order.

I/O Fan

This section covers removal and replacement of the I/O fan.

Removal of I/O Fan

1. If you have not already done so, shut down the system as described in “Stopping the System Unit” on page 224.
2. If you have not already done so, unplug the system unit power cable from the electrical outlet.
3. If you have not already done so, remove the front cover as described in “Removal of Covers” on page 226.
4. Remove the retaining screws that secure the I/O fan assembly to the system unit.

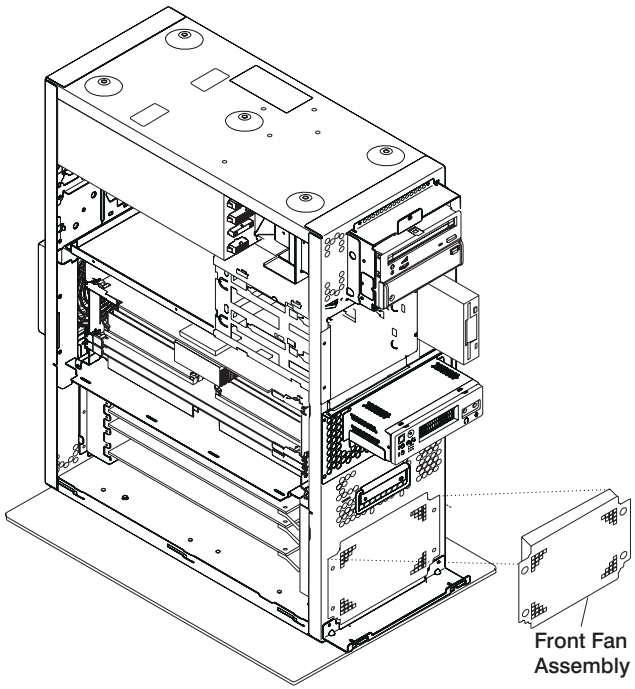

5. Slide the I/O fan assembly out of the system unit.
6. Disconnect the power cable from the fan connector (J3) from the I/O board.

Replacement of I/O Fan

Perform the removal steps in the reverse order.

Disk Drive Cage

This section covers removal and rplacement of the disk drive cage.

Removal of Disk Drive Cage

1. If you have not already done so, shut down the system as described in “Stopping the System Unit” on page 224.
2. If you have not already done so, unplug the system unit power cable from the electrical outlet.
3. If you have not already done so, remove the front, rear and side covers as described in “Removal of Covers” on page 226.
4. If the system has a padlock or cable securing the disk drive cage, remove the padlock or cable.
5. Loosen the retaining screw that secures the disk drive cage cover to the disk drive cage and remove the cover.

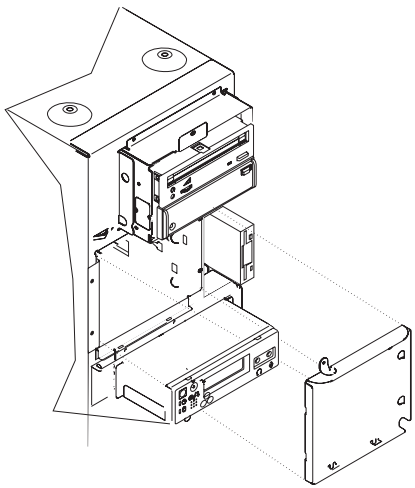

Attention: Be certain to record the location of disk drives prior to removal or disconnection.

6. If you have not already done so, remove the disk drives as described in “Disk Drives” on page 245.
7. Remove the retaining screws that secure the disk drive cage to the front of the system unit.
8. Record the cable locations and disconnect the cables from the backplane connectors.
9. Remove the retaining screws that secure the back of the disk drive cage assembly to the system unit.
10. Remove the disk drive cage from the system unit.

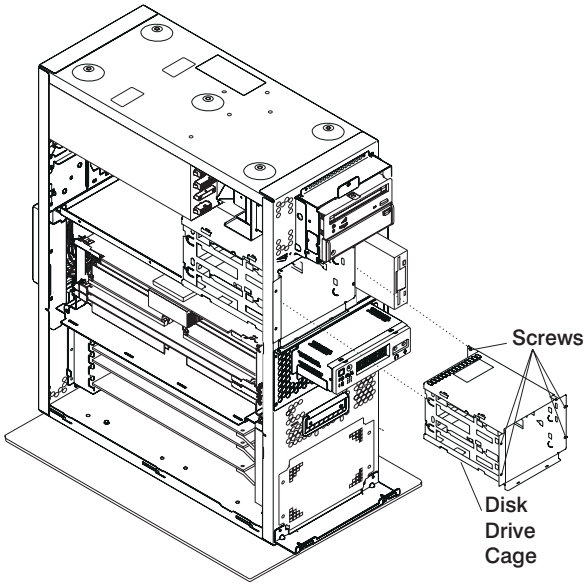

Replacement of Disk Drive Cage

Perform the removal steps in the reverse order.

CD-ROM Drive, Tape Drive, Diskette Drive

This section covers removal and replacement of media drives.

CAUTION:
Do not open the drive; no user adjustments or serviceable parts are inside.

Removal of Media Drives

1. If you have not already done so, shut down the system as described in “Stopping the System Unit” on page 224.
2. If you have not already done so, unplug the system unit power cable from the electrical outlet.
3. If you have not already done so, remove the left side, right side, front, and rear covers as described in “Removal of Covers” on page 226.
4. Remove the screws that secure the media drive to the system unit.
5. Slide the drive forward toward the front of the system unit.

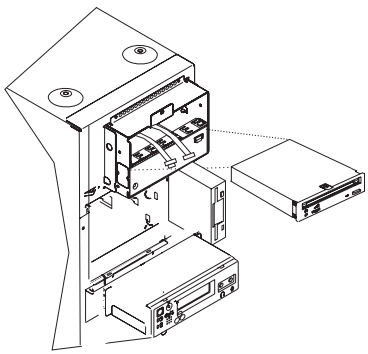

6. If you are removing disk drive, do the following:
   a. Remove one screw from the right side and two screws from the left side of the media tray.
   b. Slide the media tray forward toward the front of the system unit.
   c. Disconnect the power and data cables from the drive you are removing.
   d. If you are removing a CD-ROM drive, disconnect the audio cable from the rear of the CD-ROM drive.

Replacement of Media Drives

1. If you are installing feature code 6156, the 20 GB 8 mm tape drive, in the media bay in your system unit, make sure that the front (1) EMC clip is removed.

   Note: If you have not ordered a factory installation, remove one screw from the right side of the media tray and two screws on the left side of the media tray. Slide tray out and put aside.

a. When installing the 6156 8 mm tape drive, remove the EMC (electro magnetic compatibility) clip from the front position (1), to allow proper 20 GB 8 mm tape drive operation.

b. Pull the tab that is located on the left side out slightly to remove the EMC clip.

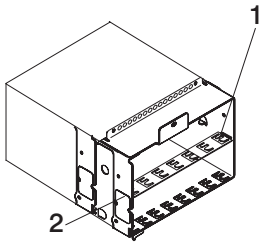

2. Align the drive with the guides at the edge of the bay.
3. Slide the drive into the system unit until it stops.
4. The diskette drive requires a 16-bit to 8-bit adapter to be installed between the connector at the rear of the drive and the data cable. Install this adapter at this time.
5. If you are installing a disk drive, locate the media tray that you removed.
6. Secure the disk drive to the media tray with the retaining screws.
7. Connect the cables from the front of the system.
   a. Locate the appropriate data cable for the drive. Connect the cable to the connector at the rear of the drive.
   b. If you are installing a CD-ROM drive, connect the audio cable from the I/O board to the audio connector at the rear of the drive.
   c. If you are installing a SCSI drive, set the SCSI address jumpers at the rear of the drive to the correct address. Refer to the documentation provided with your drive for details on setting the SCSI address.
   d. The two media bays share a common power cable. Connect an available connector on the power cable to the 4-pin connector at the rear of the drive.
8. Secure the media drive to the system unit with the retaining screws.
9. Replace the system unit covers as described in “Replacement of Covers” on page 230.

Chapter 10. Parts Information

This chapter contains parts information for the RS/6000 44P Series Model 270.

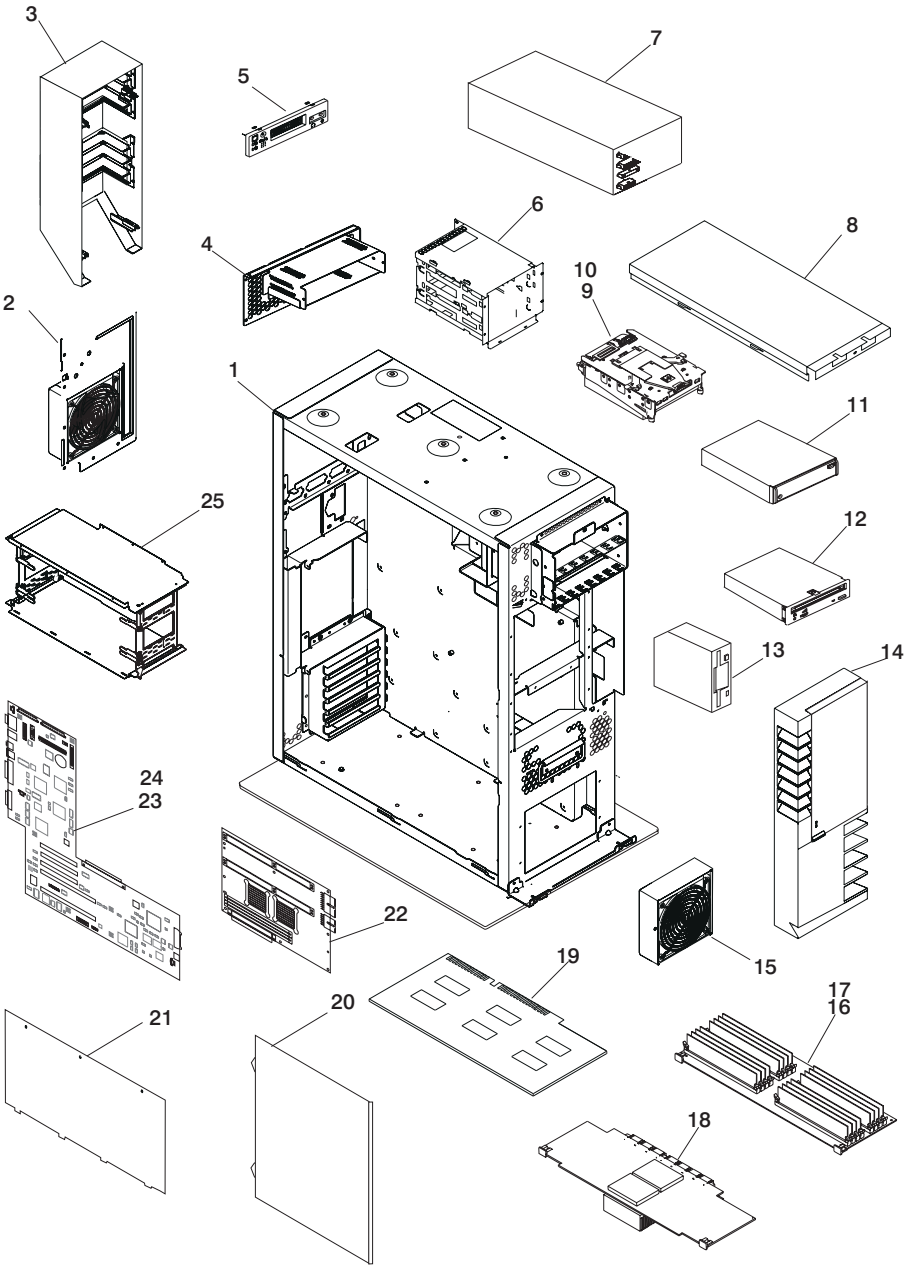
3
5
7
6
4
8
10
9
2
1
11
25
12
13
14
24
23
22
15
19
17
16
21
20
18

Index	FRU Part Number	Units Per Assy	Description
1	24L1972	1	Chassis assembly
2	74G6361	1	Fan assembly (CEC)
3	97H9415	1	Rear cover
4	74G6349	1	Operator panel bracket
5	07L7234	1	Operator panel
6	97H9302	1	Disk drive cage (includes backplane)
7	24L1968	1	Power supply 640W
8	97H5936	1	Top cover
9	See note	2	Disk drive
10	97H9336	2	Disk drive carrier
11	See note	1	Media device
12	97H7796	1	CD-ROM drive(black)
13	76H4091	1	Diskette drive
14	04N3485	1	System front cover
15	97H9425	1	Fan assembly (PCI)
16	00P1967	1 or 2	Memory card
17	93H4702	Up to 32	128 MB Memory module
	93H4702	Up to 32	128 MB DIMM feature 4110
	07L9030	Up to 32	256 MB Memory module
	07L9030	Up to 32	256 MB DIMM feature 4119
	09P0550	Up to 32	256 MB DIMM feature 4120
	09P0491	Up to 32	512 MB DIMM feature 4121
18	09P0399	1 or 2	Processor card (1-way, 375 MHz, 4 MB cache)
	09P0406	1 or 2	Processor card (2-way, 375 MHz, 4 MB cache)
	09P0143	1 or 2	Processor card (2-way, 375 MHz, 8 MB cache)
	09P4478	1 or 2	Processor card (2-way, 450 MHz, 8 MB cache)
19	See note	Up to 5	Adapter
20	97H5937	2	Side cover
21	24L1975	1	CEC cover
22	08L0988	1	System board
23	41L6013	1	I/O board
24	15F8409	1	Battery
25	24L1976	1	Processor and memory card cage
26	24L1971	1	Baffle
27	60G1994	1	Bracket, I/O
28	74G6350	1	Shield, 2 slot DASD
29	97H9431	1	Processor/memory slot filler
30	97H9423	1	Foam, CEC

Note: See *RS/6000 and @server pSeries Diagnostics Information for Multiple Bus Systems* for part numbers.

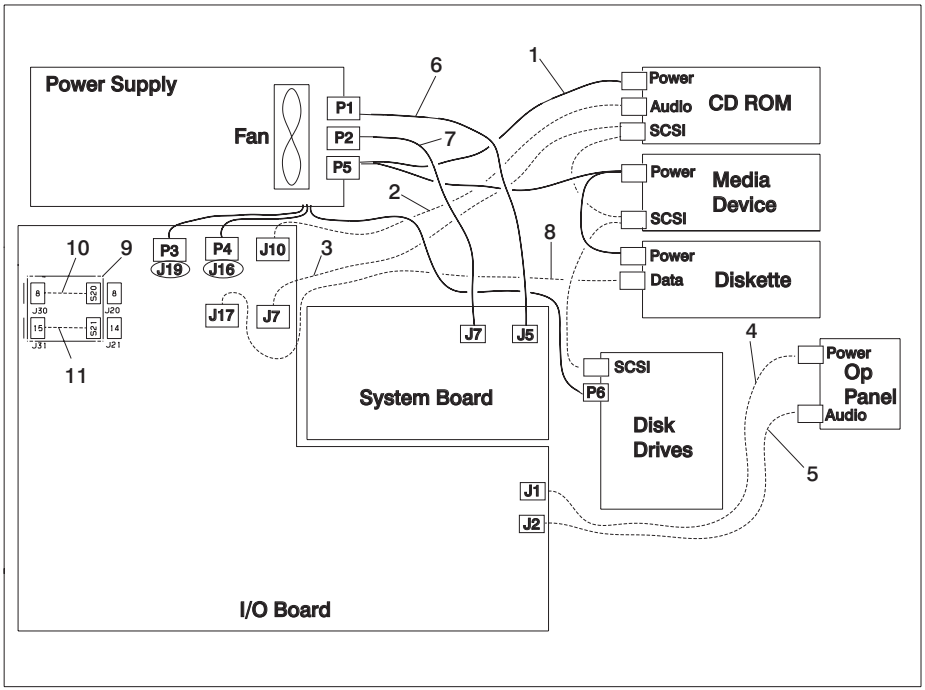
Power Supply
Fan
P1
P2
P5
6
1
7
2
Power
Audio
SCSI
CD ROM
Power
SCSI
Media
Device
Power
Data
Diskette
8
10
9
P3
J19
P4
J16
J10
3
J17
J7
J7
J5
SCSI
P6
System Board
Disk
Drives
4
Power
Op
Panel
Audio
5
J1
J2
I/O Board
11

Note: P3 cable goes into designated socket J19, and P4 cable goes into designated socket J16.

Index	FRU Part Number	Units Per Assy	Description
1	24L1909	1	Cable (Media devices power)
2	97H9321	1	Cable (CD-ROM audio)
3	97H9322	1	Cable (Media and disk drive SCSI)
4	97H9328	1	Cable (Operator panel power)
5	97H9442	1	Cable (Operator panel audio)
6	97H9315	1	Cable (Power, system board)
7	97H9316	1	Cable (Power, system board)
8	97H9320	1	Cable (Diskette signal)
9	97H9327	1	Cable (Includes both tablet and Ethernet)
10	97H9323	1	Cable (Tablet signal)
11	97H9324	1	Cable (AUI Ethernet signal)

Keyboards and Mouse

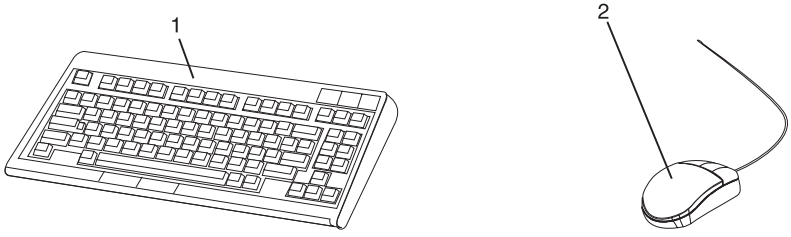

Index	FRU Part Number	Units Per Assy	Description
1	93H8120	1	Keyboard, 101 United States English (ID 103P)
	93H8121	1	Keyboard, 102 Canada French (ID 058)
	93H8122	1	Keyboard, 102 Canada French (ID 445)
	93H8123	1	Keyboard, 102 Spanish (ID 171)
	93H8124	1	Keyboard, 104 Brazil Portuguese (ID 275)
	93H8125	1	Keyboard, 102 Arabic (ID 238)
	93H8126	1	Keyboard, 102 Belgium French (ID 120)
	93H8127	1	Keyboard, 102 Belgium (ID 120)
	93H8128	1	Keyboard, 102 Bulgarian (ID 442)
	93H8129	1	Keyboard, 102 Czech (ID 243)
	93H8130	1	Keyboard, 102 Danish (ID 159)
	93H8131	1	Keyboard, 102 Dutch (ID 143)
	93H8132	1	Keyboard, 102 French (ID 189)
	93H8133	1	Keyboard, 102 German (ID 129)
	93H8134	1	Keyboard, 102 Greek (ID 319)
	93H8135	1	Keyboard, 101 Hebrew (ID 212)
	93H8136	1	Keyboard, 102 Hungarian (ID 208)
	93H8137	1	Keyboard, 102 Iceland (ID 197)
	93H8138	1	Keyboard, 102 Italy (ID 142)
	93H8139	1	Keyboard, 102 Norwegian (ID 155)
	93H8140	1	Keyboard, 102 Polish (ID 214)
	93H8141	1	Keyboard, 102 Portuguese (ID 163)
	93H8142	1	Keyboard, 102 Romainian (ID 446)
	93H8143	1	Keyboard, 101 Russian (ID 443)
	93H8144	1	Keyboard, 102 Serbian (ID 118)
	93H8145	1	Keyboard, 102 Slovak (ID 245)
	93H8146	1	Keyboard, 102 Spanish (ID 172)
	93H8147	1	Keyboard, 102 Sweden/Finland (ID 153)
	93H8148	1	Keyboard, 105 Swiss F/G (ID 150)
	93H8149	1	Keyboard, 102 Turkish (ID 179)
	93H8150	1	Keyboard, 102 Turkish (ID 440)
	93H8151	1	Keyboard, 102 UK English (ID 166)
	93H8152	1	Keyboard, 102 Latvia (ID 234)
	93H8153	1	Keyboard, US English ISO9995 (ID 103P)
	93H8154	1	Keyboard, 106 Japan (ID 194)
	93H8155	1	Keyboard, 101 Chinese/US (ID 467)
	93H8156	1	Keyboard, 103 Korea (ID 413)
	93H8157	1	Keyboard, 101 Thailand (ID 191)
2	76H5084	1	Three Button Mouse

Keyboards and Mouse (Black)

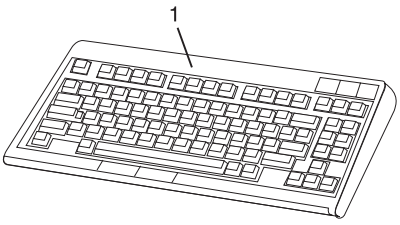

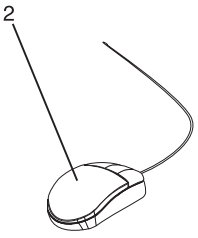

Index	FRU Part Number	Units Per Assy	Description
1	07L9446	1	Keyboard, 101 United States English (ID 103P)
	07L9447	1	Keyboard, 102 Canada French (ID 058)
	07L9448	1	Keyboard, 102 Canada French (ID 445)
	07L9449	1	Keyboard, 102 Spanish (ID 171)
	07L9450	1	Keyboard, 104 Brazil Portuguese (ID 275)
	07L9451	1	Keyboard, 102 Arabic (ID 238)
	07L9452	1	Keyboard, 102 Belgium French (ID 120)
	07L9453	1	Keyboard, 102 Belgium (ID 120)
	07L9454	1	Keyboard, 102 Bulgarian (ID 442)
	07L9455	1	Keyboard, 102 Czech (ID 243)
	07L9456	1	Keyboard, 102 Danish (ID 159)
	07L9457	1	Keyboard, 102 Dutch (ID 143)
	07L9458	1	Keyboard, 102 French (ID 189)
	07L9459	1	Keyboard, 102 German (ID 129)
	07L9460	1	Keyboard, 102 Greek (ID 319)
	07L9461	1	Keyboard, 101 Hebrew (ID 212)
	07L9462	1	Keyboard, 102 Hungarian (ID 208)
	07L9463	1	Keyboard, 102 Iceland (ID 197)
	07L9464	1	Keyboard, 102 Italy (ID 142)
	07L9465	1	Keyboard, 102 Norwegian (ID 155)
	07L9466	1	Keyboard, 102 Polish (ID 214)
	07L9467	1	Keyboard, 102 Portuguese (ID 163)
	07L9468	1	Keyboard, 102 Romainian (ID 446)
	07L9469	1	Keyboard, 101 Russian (ID 443)
	07L9470	1	Keyboard, 102 Serbian (ID 118)
	07L9471	1	Keyboard, 102 Slovak (ID 245)
	07L9472	1	Keyboard, 102 Spanish (ID 172)
	07L9473	1	Keyboard, 102 Sweden/Finland (ID 153)
	07L9474	1	Keyboard, 105 Swiss F/G (ID 150)
	07L9475	1	Keyboard, 102 Turkish (ID 179)
	07L9476	1	Keyboard, 102 Turkish (ID 440)
	07L9477	1	Keyboard, 102 UK English (ID 166)
	07L9478	1	Keyboard, 102 Latvia (ID 234)
	07L9479	1	Keyboard, US English ISO9995 (ID 103P)
	07L9480	1	Keyboard, 106 Japan (ID 194)
	07L9481	1	Keyboard, 101 Chinese/US (ID 467)
	07L9482	1	Keyboard, 103 Korea (ID 413)
	07L9483	1	Keyboard, 101 Thailand (ID 191)
2	08L0362	1	Three Button Mouse (Black)

Power Cables

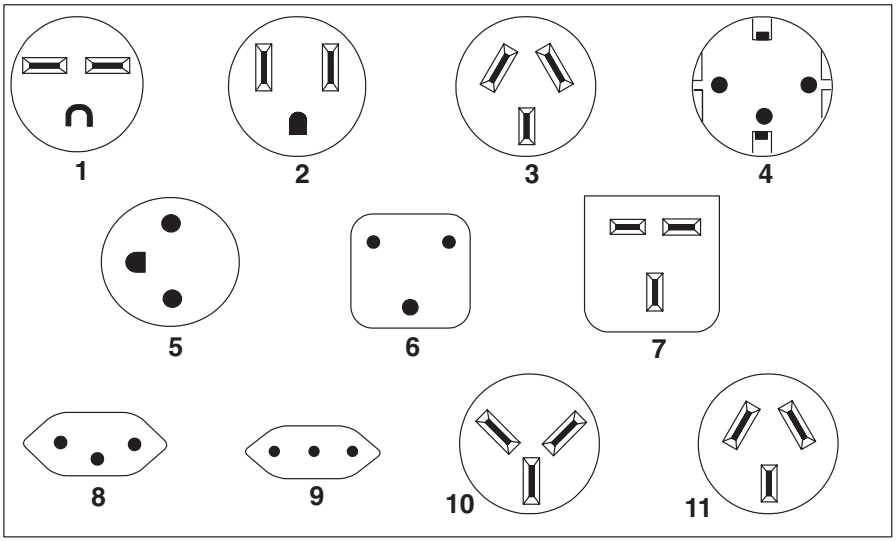

Index	Part Number	Country/Region
1	1838574	Bahamas, Barbados, Bolivia, Brazil, Canada, Costa Rica, Dominican Republic, El Salvador, Ecuador, Guatemala, Guyana, Haiti, Honduras, Jamaica, Japan, Netherlands Antilles, Panama, Peru, Philippines, Taiwan, Thailand, Trinidad Tobago, U.S.A., Venezuela
2	6952300	Bahamas, Barbados, Bermuda, Bolivia, Brazil, Canada, Cayman Islands, Colombia, Costa Rica, Dominican Republic, Ecuador, El Salvador, Guatemala, Guyana, Haiti, Honduras, Jamaica, Japan, Korea (South), Mexico, Netherlands Antilles, Nicaragua, Panama, Peru, Philippines, Puerto Rico, Saudi Arabia, Suriname, Trinidad, Taiwan, U.S.A. (except Chicago), Venezuela
3	62X1045	Chicago, U.S.A.
4	13F9940	Argentina, Australia, New Zealand
5	1339520	Abu Dhabi, Austria, Belgium, Bulgaria, Botswana, Egypt, Finland, France, Germany, Greece, Iceland, Indonesia, Korea (South), Lebanon, Luxembourg, Macau, Netherlands, Norway, Portugal, Saudi Arabia, Spain, Sudan, Sweden, Turkey, Yugoslavia
6	13F9997	Denmark
7	14F0015	Bangladesh, Burma, Pakistan, South Africa, Sri Lanka
8	14F0033	Bahrain, Bermuda, Brunei, Channel Islands, Cyprus, Ghana, Hong Kong, India, Iraq, Ireland, Jordan, Kenya, Kuwait, Malawi, Malaysia, Nigeria, Oman, People's Republic of China, Qatar, Sierra Leone, Singapore, Tanzania, Uganda, United Arab Emirates (Dubai), United Kingdom, Zambia
9	14F0051	Liechtenstein, Switzerland
10	14F0069	Chile, Ethiopia, Italy
11	14F0087	Israel
12	6952291	Paraguay, Colombia, Uruguay

Appendix A. Environmental Notices

Product Recycling and Disposal

This unit contains materials such as circuit boards and connectors with lead that require special handling and disposal at end of life. Before this unit is disposed of, these materials must be removed and recycled or discarded according to applicable regulations. This manual contains specific information on batteries where applicable. This product may contain nickel-cadmium and/or lithium batteries. The battery(s) must be recycled or disposed of properly. Recycling facilities may not be available in your area. In the United States, IBM has established a collection process for reuse, recycling, or proper disposal of used sealed lead acid, nickel cadmium and nickel metal hydride batteries and battery packs from IBM equipment. For information on proper disposal of the nickel cadmium batteries in this product, please contact IBM at 1-800-426-4333. For information on battery disposal outside the United States, contact your local waste disposal facility.

Environmental Design

The environmental efforts that have gone into the design of this system signify IBM's commitment to improve the quality of its products and processes. Some of these accomplishments include the elimination of the use of Class I ozone-depleting chemicals in the manufacturing process and reductions in manufacturing wastes. For more information, contact an IBM account representative.

Unit Emissions

The unit-related emission value is equal to or lower than 70dB(A).

Der Geräuschpegel der Einheit ist kleiner oder gleich 70 db(A).

Appendix B. Notices

This information was developed for products and services offered in the U.S.A.

The manufacturer may not offer the products, services, or features discussed in this document in other countries. Consult the manufacturer's representative for information on the products and services currently available in your area. Any reference to the manufacturer's product, program, or service is not intended to state or imply that only that product, program, or service may be used, Any functionally equivalent product, program or service that does not infringe any intellectual property right of the manufacturer may be used instead. However, it is the user's responsibility to evaluate and verify the operation of any product, program, or service.

The manufacturer may have patents or pending patent applications covering subject matter described in this document. The furnishing of this document does not give you any license to these patents. You can send license inquiries, in writing, to the manufacturer.

The following paragraph does not apply to the United Kingdom or any country where such provisions are inconsistent with local law: THIS PUBLICATION IS PROVIDED "AS IS" WITHOUT WARRANTY OF ANY KIND, EITHER EXPRESS OR IMPLIED, INCLUDING, BUT NOT LIMITED TO, THE IMPLIED WARRANTIES OF MERCHANTABILITY OR FITNESS FOR A PARTICULAR PURPOSE. Some states do not allow disclaimer of express or implied warranties in certain transactions, therefore, this statement may not apply to you.

This information could include technical inaccuracies or typographical errors. Changes are periodically made to the information herein: these changes will be incorporated in new editions of the publication. The manufacturer may make improvements and/or changes in the product(s) and/or the program(s) described in this publication at any time without notice.

Information concerning products made by other than the manufacturer was obtained from the suppliers of those products, their published announcements, or other publicly available sources. The manufacturer has not tested those products and cannot confirm the accuracy of performance, compatibility or any other claims related to products made by other than the manufacturer. Questions on the capabilities of products made by other than the manufacturer should be addressed to the suppliers of those products.

Appendix C. Firmware Updates

This section provides information and instruction for updating firmware. You may need to perform these steps if you are installing an option or if your support representative has instructed you to update your firmware.

Checking the Current Firmware Levels

To check the current levels that are installed on the system, do the following:

1. Log in as root user.
2. Enter the following command:

   lscfg -vp | grep alterable
3. Press enter. A report will be produced similar to the following:

```
ROM Level.(alterable).......sh000221   <=== service processor F/W level
ROM Level.(alterable).......SPH00056   <=== system F/W level
```

Notes:

1. In the example above, if the current version of service processor firmware is sh000221, the last six characters of the ROM Level represent a date in a `yymmdd` format, where `yy` is the last two digits of the year, `mm` is the month and `dd` is the day of the firmware (Julian date).
2. Also in the example above, if the current version of system firmware is SPH00056, the last five characters of the ROM Level represent a date in a `yyddd` format, where `yy` is the last two digits of the year and `ddd` is the Gregorian date of the firmware.

Check the RS/6000 support web site at http://www.rs6000.ibm.com/support/micro for the latest level of downloadable firmware. If the version of system firmware installed on your system is older than (has an earlier date than) the system firmware shown on the web site, you should consider downloading and applying the update. If the version of service processor firmware installed on your system is older than (has an earlier date than) the service processor firmware shown on the web site, you should consider downloading and applying the update.

Updating System Firmware

To update the system firmware, perform the following steps:

1. Log in as root user.
2. If the directory **/tmp/fwupdate** does not exist, create it by issuing the following command: `mkdir /tmp/fwupdate`
3. The firmware update file must be written into the **/tmp/fwupdate** directory on the Model 270. This can be done by using the **ftp** command to get the image from an ftp server, NFS-mounting the directory on the host server, or downloading it from the web site at http://www.rs6000.ibm.com/support/micro.

   After the firmware update file has been written into the **/tmp/fwupdate** directory, verify its existence by entering the following command:

```
ls /tmp/fwupdate/sx*.img
```

The update file name will have the format *sxyyddd.img*. The *sx* indicates that this is a combined image for a Model 270 server, *yy* is the last two digits of the year, and *ddd* is the Julian date of the update file.

4. After the update file has been written to the **/tmp/fwupdate** directory, enter the following commands:

   ```
   cd /usr/lpp/diagnostics/bin
   ```

   then

   ```
   ./update_flash -f /tmp/fwupdate/sxyyddd.img
   ```

   Where sxyyddd.img is the name of the firmware image file that is in the /tmp/fwupdate directory.

   Notes:

   a. Make sure that you include the periods (.) in the commands shown above.

   b. AIX commands are case-sensitive. Type them exactly as shown.

   You are asked by the system for confirmation to proceed with the firmware update and the required reboot. If you confirm, the system applies the new firmware, reboots, and returns to the AIX prompt. This may take up to ten minutes, depending on the configuration of the system.

   Attention: On some systems, the message `Wait for rebooting before stopping` may appear on the system display. *Do not* turn off the system unit until the system has fully rebooted to the AIX login prompt. If a shutdown is necessary at that time, log in as root user and issue the **shutdown** command. While the update is in progress, you will see `Rebooting...` on the display for as long as three minutes.

The firmware update is complete.

Appendix D. Service Processor Setup and Test

This appendix provides an example of a basic service processor setup checklist. Your setup may include more or fewer of the available features, so you can adjust this checklist for your own application.

Service Processor Setup Checklist

1. Unplug the power cord from the server.
2. Attach a local terminal for this setup procedure.
3. Plug in the server and power on the local terminal.

   Attention: Make sure that server power remains off.
4. Start the service processor menus. See “Service Processor Menus” on page 151.
5. Set the system name. See “Privileged User Menus” on page 153.
6. Enable surveillance. See “Service Processor Setup Menu” on page 154.
7. Configure call-in/call-out. See “Call-In/Call-Out Setup Menu” on page 167.
8. Exit the service processor menus.
9. Unplug the power cord from the server.
10. Attach modems (if needed). See “Accessing Service Processor Menus Remotely” on page 151.
11. Plug in the server.

    Attention: Make sure that server power remains off.
12. Test both of the following procedures:
    - Call-in, see “Testing Call-In” on page 290
    - Call-out, see “Testing Call-Out” on page 290
13. Use the “Save or Restore Hardware Management Policies” in the “Introduction to Tasks and Service Aids” section of the *RS/6000 and @server pSeries Diagnostics Information for Multiple Bus Systems* to back up the service processor settings.

    Note: This backup task is strongly recommended to protect the usefulness of the service processor and the availability of the server.

Your service processor is now ready for use.

Testing the Setup

This section contains testing procedures to help ensure your setup is working.

These tests include communicating with the server operating system. Before you start, ensure that the necessary serial port(s) is configured. If you need assistance, refer to “Serial Port Configuration” on page 291.

The server should be powered off as a result of the “Service Processor Setup Checklist.”

Testing Call-In

The procedure below allows you to test the ability of your server's service processor to receive calls.

1. Go to your remote terminal and call in to your server. Your server answers and offers you the Service Processor Main Menu after requesting your privileged access password.
2. Select **System Power Control**.
3. Select **Power-On System**.

   When you are asked if you wish to continue powering on the system, type **Y**.
4. After the system firmware and operating system have initialized the server, the login prompt displays at your remote terminal if you have set up Seamless Modem Transfer (refer to page 297 for more information). This may take several minutes. When the login prompt displays, you have successfully called the service processor.
5. Type `logout` to disconnect from the operating system. The message `No Carrier` displays on your remote terminal.
6. Call your server again. The operating system answers and offers you the login prompt. If these tests are successful, call-in is working correctly.
7. Log in and type **shutdown -F** to shut down your server.
8. The message `No Carrier` displays on your remote terminal.

Testing Call-Out

The procedure below allows you to test the ability of your server's service processor to call-out over a phone line.

During the setup, you entered your phone numbers for the pager (on page 170) and customer voice (on page 170). These numbers are used for this test.

1. Your remote terminal is disconnected as a result of the Call-In test.
2. Call your server again.
3. At the service processor main menu, select **Call-In/Call-Out Setup** menu, then select **Call-Out** test. This action causes a simulated error condition for the purposes of this test.
4. After a few moments, a message displays regarding an illegal entry. Press Enter to clear the message and return to the main menu.
5. When your telephone rings, answer the call. You should hear the sound of a telephone being dialed. This is your computer trying to page you.

If this test is successful, call-out is working correctly.

Return to the "Call-In/Call-Out Setup Menu" on page 167 to enter the actual telephone numbers that your server will use for reporting problems.

Serial Port Configuration

To configure the serial port on an AIX system, run the following from an AIX console:

1. Log in as `root` user.
2. To determine if you have any serial ports already configured, type:

   ```
   lsdev -Cc tty
   ```

   If no serial ports are configured, none are listed. If you want to configure serial ports that are not listed, continue with the remaining steps.
3. Identify the serial port(s) with the modem(s).
4. Type **smit tty**.
5. Select **add tty**.
6. Select **RS232**.
7. Select **baud rate 9600** or higher.
8. Select **login enable** and set the flow control to RTS.
9. Commit the selections and set up any other needed serial ports.
10. Exit SMIT.

Appendix E. Modem Configurations

The service processor is designed to place little demand on the attached modem, thereby increasing the setup and connection success rates.

Sample Modem Configuration Files

Several sample modem configurations files are supplied that either work directly with your modem, or provide a good starting point for a custom setup, if required. These files are included on the Sample Modem Configuration Files diskette and in your Service Processor firmware with the following names:

Diskette File Name	Service Processor Firmware File Name
modem_z.cfg	modem_z.sp
modem_z0.cfg	modem_z0.sp
modem_f.cfg	modem_f.sp
modem_f0.cfg	modem_f0.sp
modem_f1.cfg	modem_f1.sp
modem_m0.cfg	modem_m0.sp
modem_m1.cfg	modem_m1.sp

The sample modem configuration files are located in the **/usr/share/modems** subdirectory, if your server is using AIX. A listing of each file is included at the end of this appendix.

Configuration File Selection

Use the following selection procedures and your modem manual, to determine which of the configuration files is suitable for your use.

1. Is your modem an IBM 7852-400?

   If yes, use modem configuration file **modem_m0.cfg** and then go to step 7.

   Note: The IBM 7852-400 modem has DIP switches on the right side of the unit. See “IBM 7852-400 DIP Switch Settings” on page 296 for the correct switch settings.

   If no, continue with step 2.

2. Is your modem an IBM 7857-017?

   If yes, use modem configuration file **modem_m1.cfg** and then go to step 7.

   Note: The IBM 7857-017 modem has two telephone line connections on the back of the unit. One is marked **LL** (for Leased Line), and the other is marked **PTSN** (for Public Telephone Switched Network). The service processor expects to use the modem on the public network, so the telephone line should attach to the PTSN connector.

If no, continue with step 3.

3. Does your modem respond to the extended command set (prefixed with &)?

   If yes, go to step 5.

   OR

   If no, continue with step 4.

4. Does your modem respond to:
   - ATZ reset command,

     OR
   - ATZn reset commands, where n can be 0, 1, and so on?

     If ATZ, configuration file **modem_z.cfg** is recommended. If ATZn, configuration file **modem_z0.cfg** is recommended.

     Go to step 7.

5. Does your modem command set include a test for V.42 error correction at the remote modem (often called “Auto-Reliable Mode”)?

   If yes, disable this test. You can use sample configuration files

   /usr/share/modem_m0.cfg

   OR

   /usr/share/modem_m1.cfg as models to help you create a file for your particular modem. See “Customizing the Modem Configuration Files” on page 295. Go to step 7.

   If no, go to step 6.

6. Does your modem respond to:
   - AT&F reset command,

     OR
   - AT&Fn reset commands, where n can be 0, 1, and so on.?

     If AT&F, configuration file **modem_f.cfg** is recommended.

     If AT&Fn, configuration file **modem_f0.cfg** or **modem_f1.cfg** is recommended, depending on which provides the hardware flow control profile.

7. You have completed selection of the configuration file.

   If your modem configuration selection is not available in the Service Processor Modem Configuration Menu, you must access it through the Configure Remote Maintenance Policy Service Aid.

   If you find it necessary to adjust any of these configuration files, use the manual provided with your modem. It is recommended you select settings that enable hardware flow control and respond to DTR.

   Note: Some older modems do not respond to the commands **X0** or **&R1**. You should edit out these commands from the modem configuration file if yours is such a modem. See your modem manual for more information.

Note: Some modems, such as the IBM 7857-017, are not designed for the paging function. Although they can be used for paging, they return an error message when they do not get the expected response from another modem. Therefore,

even though the paging was successful, the error message causes the service processor to retry, continuing to place pager calls for the number of retries specified in the Call-Out Policy Setup Menu. These retries result in redundant pages.

Examples for Using the Generic Sample Modem Configuration Files

Modem	Setup Z	Setup Z0 (Rare)	Setup F	Setup F0	Setup F1
AT&T DataPort 2001 **				X	
Bocamodem 1440E			X		
Hayes Smart Modem 300	X				
IBM 5841	X				
IBM 5843	X				
IBM 7851				X	
IBM 7852-10				X	
IBM 7855					X
USRobotics 36.6K Sportster					X
Zoom V.32			X		

Note: ** Ring interrupt only on first ring.

Customizing the Modem Configuration Files

You can create your own modem configuration files or modify the samples provided. After you customize your modem configuration files, you *must* access them through the Configure Remote Maintenance Policy Service Aid rather than from the service processor menus.

Notes:

1. If you have already set up your serial ports, line speeds, authorizations and telephone numbers from the service processor menus, use the service aid to specify your customized modem configuration files.
2. If you have not already set up your serial ports, line speeds, authorizations, and telephone numbers from the service processor menus, you can use the service aids to set them while you specify your customized modem configuration files.

To disable auto-reliable mode testing of the remote modem, use the sample modem configuration file **/usr/share/modems/modem_f.cfg** as a model that you can modify as follows:

1. Find the necessary command in your modem manual.
2. Copy the **/usr/share/modems/modem_f.cfg** file to a new file with a different name (for example **modem_fx.cfg**).

3. In the new file (**modem_fx.cfg**), change the line `Send "ATE0T\r"` to `Send "ATcccE0T\r"` where ccc is the added command as specified your modem manual, as follows:

   Change the third line of each of the following stanzas:
   - `condout`
   - `condin`
   - `ripo`

4. Save the changes.

IBM 7852-400 DIP Switch Settings

If you are using a 7852-400 modem to enable service processor communications, the DIP (dual inline package) switches must be set according to the following table.

Switch	Position	Function
1	Up	Force DTR
2	Up	Flow Control &E4
3	Down	Result Codes Enabled
4	Down	Modem Emulation Disabled
5	Up	Auto Answer Enabled
6	Up	Maximum Throughput Enabled
7	Up	RTS Normal Functions
8	Down	Enable Command Mode
9	Down	Remote Digital Loopback Test Enabled
10	Up	Dial-Up Line Enabled
11	*Up	AT Responses Enabled (Extended Responses Disabled)
12	*Down	Asynchronous Operation
13	Up	28.8KB Line Speed
14	Up	
15	Up	CD and DSR Normal Functions
16	Up	2-Wire Leased Line Enabled

* Only switches 11 and 12 are changed from the factory default settings.

Xon/Xoff Modems

Some early modems assume software flow control (Xon/Xoff) between the computer and the modem. Modems with this design send extra characters during and after the transmitted data. The service processor cannot accept these extra characters. If your configuration includes such a modem, your functional results may be unpredictable.

The sample modem configuration files included in this package do not support these modems, so custom configuration files are necessary. The Anchor Automation 2400E is an example of such a modem.

Iif you experience unexplainable performance problems that may be due to Xon/Xoff characters, it is recommended that you upgrade your modem.

Ring Detection

Most modems produce an interrupt request each time they detect a ring signal. Some modems generate an interrupt only on the first ring signal that they receive. The AT&T Data Port 2001 is an example of such a modem.

The service processor uses the ring interrupt request to count the number of rings when ring indicate power-on (RIPO) is enabled. If your modem produces an interrupt on only the first ring, set ring indicate power-on to start on the first ring. Otherwise, you can choose to start ring indicate power-on on any ring count.

Terminal Emulators

The service processor is compatible with simple ASCII terminals, and therefore compatible with most emulators. When a remote session is handed off from the service processor to the operating system, agreement between terminal emulators becomes important.

The server's operating system will have some built-in terminal emulators. You may also have a commercially-available terminal emulator. It is important that the local and host computers select the same or compatible terminal emulators so that the key assignments and responses match, ensuring successful communications and control.

For best formatting, choose line wrap in your terminal emulator setup.

Recovery Procedures

Situations such as line noises and power surges can sometimes cause your modem to enter an undefined state. When it is being used for dial-in, dial-out or ring indicate power-on, your modem is initialized each time one of these actions is expected. If one of these environmental conditions occurs after your modem has been initialized, it may be necessary to recover your modem to a known state.

If your modem communicates correctly with remote users, it is probably in control. It may be wise to occasionally change some of the functional settings and then change them back, just for the sense of security that the modem is communicating, and to ensure it has been initialized recently.

If your system is particularly difficult to access physically, another strategy is to protect it with an uninterruptible power source (UPS) and a phoneline surge protector.

In case recovery becomes necessary, shut down your system as gracefully as possible. Disconnect the power cable and press the power button to drain capacitance while power is disconnected. Disconnect and reconnect modem power, then reconnect system power to completely reinitialize your system.

Transfer of a Modem Session

Because many modem command variations exist, the sample modem configuration files located at the end of this appendix have been written to capture the largest number of workable modem settings.

The modem command **&Dn** (where 'n' is a number) generally sets the modem response to the data terminal ready (DTR) signal from the server's serial port. The desired response is that the modem will hold a connection while DTR is enabled, and drop the connection when DTR is released. This is the mechanism by which the server hangs up on a connection under normal conditions.

Consult your modem manual for its specific response scheme for the **&Dn** command.

Two strategies are available for dealing with the modem's response to DTR:

- Recovery
- Prevention

Before you use one of these strategies, determine if your server's modem is set up properly to respond to DTR.

With the remote terminal connected to serial port 1 and defined as the primary console device, there are two tests you can perform:

1. Will the modem drop the connection after the `System initialization complete` message displays at the remote terminal?

   If yes, the modem is set up correctly.

   If no, try another **&Dn** setting for your server's modem. See your modem manual for this information. The **&Dn** command appears in three places each in three of the sample modem configuration files:
   - modem_f.cfg
   - modem_f0.cfg
   - modem_f1.cfg
2. Will the server's modem disconnect when the power drops? You can make this observation at the remote terminal by commanding your server to shutdown and power off. (The AIX command **shutdown -F** will do this.) Watch for the message `NO CARRIER` on your remote terminal.

   If Yes, this is the correct response. The modem is set up correctly.

   If No, try another **&Dn** setting for your server's modem. See your model manual for this information. The **&Dn** command appears in three places each in three of the sample modem configuration.

If you are using modem_z.cfg or modem_z0.cfg, you cannot control DTR response. If your remote terminal does not disconnect after logging off, you must command the remote terminal emulator to hang up. This then breaks the connection.

Recovery Strategy

The recovery strategy consists of making two calls to establish a remote session. This is the easiest solution to implement, and allows more freedom for configuring your server's serial ports.

To set up a remote terminal session, dial into the service processor and start the system. After the operating system is loaded and initialized, the connection will be dropped. At this point, you call the server back and the operating system will answer and offer you the login prompt.

Prevention Strategy

The disconnect is caused by the operating system when it initializes the primary console. The modem tests listed above are conducted with the remote terminal selected as the primary console to manifest the modem's response to DTR transitions.

- If a local ASCII terminal or a graphics console will be a permanent part of your server, then make one of them the primary console. Your remote terminal will no longer experience the connection loss.
- If a local console is not a permanent part of your server, you can still assign either the unused graphics console or the unused serial port as the primary console. This gives you the desired seamless connection at your remote terminal.
- If you choose to use the unused serial port as the primary console, some initialization traffic will be sent to any serial device attached to that port. As a result, that serial device's connection and function could be affected. These impacts may make that port unattractive for devices other than a temporary local ASCII terminal.

Modem Configuration Samples

Sample File modem_z.cfg

```
#
# COMPONENT_NAME: (ESPSETUP) ENTRY SERVICE PROCESSOR SETUP Z
#
# FUNCTIONS: Modem configuration file for many early Hayes* compatible modems.
#  This example uses the ATZ reset command to choose the factory defaults.
#  This setup will work for many modems, but it is required for early vintage
#  modems which respond to neither the ATZ0 reset command nor the extended (&)
#  commands.  Refer to your modem manual.
#
# * Trademark of Hayes Microcomputer Products, Inc.
#
# (C) COPYRIGHT International Business Machines Corp. 1996
# All Rights Reserved
# Licensed Materials - Property of IBM
#
# US Government Users Restricted Rights - Use, duplication or
# disclosure restricted by GSA ADP Schedule Contract with IBM Corp.
#
#
# If the modem has configuration switches, they should be set to the
# factory default settings.

ICDelay 1
DefaultTO 10
CallDelay 120
#  AT  Attention Code             ,   Inserts delay in dialing commands
#  Z   Reset to factory defaults Q0   Turn on responses
#  E0  Turn echo off             Q1   Turn off responses
#  V0  Use numeric responses     S0=0 Automatic answer inhibit
# +++  Escape to command mode    S0=2 Answer on second ring
#  H0  Hang-up                   T =  Tone mode.  When used as T\r, it is a
#                                     no op to maintain program synchronization
#                                     when modem may/will echo the commands.
#
#  %N  Call-Out phone number    %P   Paging phone number
#  %S  Modem speed (available to users)
#
# Following are common responses from a wide range of modems:
# 16, 15, 12, 10, 5 and 1 are connection responses.  Add others as required.
# 7=busy; 6=no dial tone; 4=error; 3=no carrier; 2=ring; 0=OK
#
# PROGRAMMING NOTE: No blanks between double quote marks (").

condout:    send "ATZQ0T\r"                     # Reset to factory defaults.
            ignore "0\r" or "OK\r\n" timeout 2  # Ignore modem response.
            send "ATE0T\r"                      # Initialize modem: Echo OFF,
            expect "0\r" or "OK\r\n" timeout 2  #  Enable responses (Numeric),
            send "ATQ0V0T\r"                    #  Limit response codes.
            expect "0\r" timeout 2              # Confirm commands successful.
            send "ATS0=0\r"                     # Set AutoAnswer OFF
            expect "0\r" timeout 2              # Confirm command successful.
```

```
            done

connect:    send "ATDT%N\r"                     # Tone dialing command.
                                                # %N from Call Home setup.

                                                # Expect a connection response.
 expect "16\r" or "15\r" or "14\r" or "12\r" or "10\r" or "5\r" or "1\r" busy "7\r"
 timeout 60
            done

retry:      send "A/"                           # Repeat the previous command.

                                                # Expect a connection response.
 expect "16\r" or "15\r" or "14\r" or "12\r" or "10\r" or "5\r" or "1\r" busy "7\r"
 timeout 60
            done

disconnect:
            delay 2                             # Separate from previous data.
            send "+++"                          # Assure command mode.
            delay 2                             # Allow mode switching delay.
            send "ATH0T\r"                      # Set modem switch-hook down
                                                #  (i.e., hang up).
            ignore "0\r" or "OK\r" timeout 2    # Ignore modem response.
            send "ATE0Q1\r"                     # Initialize modem: Echo OFF,
                                                #  Disable responses.
            ignore "0\r" timeout 1
            done

condin:     send "ATZQ0T\r"                     # Reset to factory defaults.
            ignore "0\r" or "OK\r\n" timeout 2  # Ignore modem response.
            send "ATE0T\r"                      # Initialize modem: Echo OFF,
            expect "0\r" or "OK\r\n" timeout 2  #  Enable responses (Numeric),
            send "ATQ0V0T\r"                    #  Limit response codes.
            expect "0\r" timeout 2              # Confirm commands successful.
            send "ATS0=2\r"                     # Set AutoAnswer ON
            expect "0\r" timeout 2              # Confirm command successful.
            done

waitcall: ignore "2\r" timeout 1                # Ignore first ring.
          expect "2\r" timeout 10               # Pick up second ring
                                                #  or timeout.
                                                # Expect a connection response.
 expect "16\r" or "15\r" or "14\r" or "12\r" or "10\r" or "5\r" or "1\r"
 timeout 60
            done

page:       send "ATDT%N,,,,%R;\r"              # %N = pager call center number
                                                # Add enough commas to wait for
                                                #  time to enter paging number.
                                                # %R = paging number

                                                # Confirm successful command.
            expect "0\r" timeout 60
            delay 2                             # Wait before hanging up.
```

```
            send "ATH0T\r"                        # Hang up.
            expect "0\r" timeout 2               # Confirm successful command.
            done

ripo:       send "ATZQ0T\r"                      # Reset to factory defaults.
            ignore "0\r" or "OK\r\n" timeout 2   # Ignore modem response.
            send "ATE0T\r"                       # Initialize modem: Echo OFF,
            expect "0\r" or "OK\r\n" timeout 2   #  Enable responses (Numeric),
            send "ATQ0V0T\r"                     #  Limit response codes.
            expect "0\r" timeout 2               # Confirm commands successful.
            send "ATS0=0\r"                      # Set AutoAnswer OFF
            expect "0\r" timeout 2               # Confirm command successful.
            done                                 # RI Power On enabled.

error:                                           # Handle unexpected modem
                                                 #  responses.
            expect "8\r" or "7\r" or "6\r" or "4\r" or "3\r"
            delay 2
            done
```

Sample File modem_z0.cfg

```
#
# COMPONENT_NAME: (ESPSETUP) ENTRY SERVICE PROCESSOR SETUP Z0
#
# FUNCTIONS: Modem configuration file for some early Hayes* compatible modems.
#  This example uses the ATZ0 reset command to choose the factory defaults.
#  This setup is recommended for modems that will respond to the ATZ0 command
#  and which do not respond to the extended (&) commands.  Refer to your modem
#  manual.
#
# * Trademark of Hayes Microcomputer Products, Inc.
#
# (C) COPYRIGHT International Business Machines Corp. 1996
# All Rights Reserved
# Licensed Materials - Property of IBM
#
# US Government Users Restricted Rights - Use, duplication or
# disclosure restricted by GSA ADP Schedule Contract with IBM Corp.
#
#
# If the modem has configuration switches, they should be set to the
# factory default settings.

ICDelay 1
DefaultTO 10
CallDelay 120
#  AT  Attention Code            ,   Inserts delay in dialing commands
#  Z0  Reset. Restore Profile 0 Q0   Turn on responses
#  E0  Turn echo off            Q1   Turn off responses
#  V0  Use numeric responses    S0=0 Automatic answer inhibit
# +++  Escape to command mode   S0=2 Answer on second ring
#  H0  Hang-up                  X0=0 Limit modem response codes
#                               T =  Tone mode.  When used as T\r, it is a
#                                    no op to maintain program synchronization
#                                    when modem may/will echo the commands.
#
#  %N  Call-Out phone number    %P   Paging phone number
#  %S  Modem speed (available to users)
#
# Following are common responses from a wide range of modems:
# 16, 15, 12, 10, 5 and 1 are connection responses.  Add others as required.
# 7=busy; 6=no dial tone; 4=error; 3=no carrier; 2=ring; 0=OK
#
# PROGRAMMING NOTE: No blanks between double quote marks (").

condout:    send "ATZ0Q0T\r"                    # Reset modem. Select profile 0
            ignore "0\r" or "OK\r\n" timeout 2  # Ignore modem response.
            send "ATE0T\r"                      # Initialize modem: Echo OFF,
            expect "0\r" or "OK\r\n" timeout 2  #  Enable responses (Numeric),
            send "ATQ0V0X0T\r"                  #  Limit response codes.
            expect "0\r" timeout 2              # Confirm commands successful.
            send "ATS0=0\r"                     # Set AutoAnswer OFF
            expect "0\r" timeout 2              # Confirm command successful.
            done
```

```
connect:    send "ATDT%N\r"                     # Tone dialing command.
                                                # %N from Call Home setup.

                                                # Expect a connection response.
 expect "16\r" or "15\r" or "14\r" or "12\r" or "10\r" or "5\r" or "1\r" busy "7\r"
 timeout 60
            done

retry:      send "A/"                           # Repeat the previous command.

                                                # Expect a connection response.
 expect "16\r" or "15\r" or "14\r" or "12\r" or "10\r" or "5\r" or "1\r" busy "7\r"
 timeout 60
            done

disconnect:
            delay 2                             # Separate from previous data.
            send "+++"                          # Assure command mode.
            delay 2                             # Allow mode switching delay.
            send "ATH0T\r"                      # Set modem switch-hook down
                                                #  (i.e., hang up).
            ignore "0\r" or "OK\r" timeout 2    # Ignore modem response.
            send "ATE0Q1\r"                     # Initialize modem: Echo OFF,
                                                #  Disable responses.
            ignore "0\r" timeout 1
            done

condin:     send "ATZ0Q0T\r"                    # Reset modem. Select profile 0
            ignore "0\r" or "OK\r\n" timeout 2  # Ignore modem response.
            send "ATE0T\r"                      # Initialize modem: Echo OFF,
            expect "0\r" or "OK\r\n" timeout 2  #  Enable responses (Numeric),
            send "ATQ0V0X0T\r"                  #  Limit response codes.
            expect "0\r" timeout 2              # Confirm commands successful.
            send "ATS0=2\r"                     # Set AutoAnswer ON
            expect "0\r" timeout 2              # Confirm command successful.
            done

waitcall: ignore "2\r" timeout 1                # Ignore first ring.
          expect "2\r" timeout 10               # Pick up second ring
                                                #  or timeout.
                                                # Expect a connection response.
 expect "16\r" or "15\r" or "14\r" or "12\r" or "10\r" or "5\r" or "1\r"
 timeout 60
            done

page:       send "ATDT%N,,,,%R;\r"              # %N = pager call center number
                                                # Add enough commas to wait for
                                                #  time to enter paging number.
                                                # %R = paging number

                                                # Confirm successful command.
            expect "0\r" timeout 60
            delay 2                             # Wait before hanging up.
            send "ATH0T\r"                       # Hang up.
            expect "0\r" timeout 2              # Confirm successful command.
```

```
            done

ripo:       send "ATZ0Q0T\r"                    # Reset modem. Select profile 0
            ignore "0\r" or "OK\r\n" timeout 2  # Ignore modem response.
            send "ATE0T\r"                      # Initialize modem: Echo OFF,
            expect "0\r" or "OK\r\n" timeout 2  #  Enable responses (Numeric),
            send "ATQ0V0X0T\r"                  #  Limit response codes.
            expect "0\r" timeout 2              # Confirm commands successful.
            send "ATS0=0\r"                     # Set AutoAnswer OFF
            expect "0\r" timeout 2              # Confirm command successful.
            done                                # RI Power On enabled.

error:                                          # Handle unexpected modem
                                                #  responses.
            expect "8\r" or "7\r" or "6\r" or "4\r" or "3\r"
            delay 2
            done
```

Sample File modem_f.cfg

```
#
# COMPONENT_NAME: (ESPSETUP) ENTRY SERVICE PROCESSOR SETUP F
#
# FUNCTIONS: Modem configuration file for many recent Hayes* compatible modems.
#  This example uses the AT&F reset command to choose the factory defaults.
#  This set up is preferred for modems with extended (&) commands.  For early
#  vintage modems, setup Z or Z0 is recommended.  If your modem responds to
#  the extended (&) commands and to factory default choices (&Fn), setup file
#  F0 or F1 is recommended.
#
# * Trademark of Hayes Microcomputer Products, Inc.
#
# (C) COPYRIGHT International Business Machines Corp. 1996
# All Rights Reserved
# Licensed Materials - Property of IBM
#
# US Government Users Restricted Rights - Use, duplication or
# disclosure restricted by GSA ADP Schedule Contract with IBM Corp.
#
#
# If the modem has configuration switches, they should be set to the
# factory default settings.

ICDelay 1
DefaultTO 10
CallDelay 120
#  AT  Attention Code            ,   Inserts delay in dialing commands
#  &F  Reset to default profile Q0   Turn on responses
#  E0  Turn echo off            Q1   Turn off responses
#  V0  Use numeric responses    S0=0 Automatic answer inhibit
# +++  Escape to command mode   S0=2 Answer on second ring
#  H0  Hang-up                  X0=0 Limit modem response codes
#                               T =  Tone mode.  When used as T\r, it is a
#                                    no op to maintain program synchronization
#                                    when modem may/will echo the commands.
#
# &C1  Detect CD                &D2  Respond to DTR (often the default)
#
#  %N  Call-Out phone number    %P   Paging phone number
#  %S  Modem speed (available to users)
#
# Following are common responses from a wide range of modems:
# 16, 15, 12, 10, 5 and 1 are connection responses.  Add others as required.
# 7=busy; 6=no dial tone; 4=error; 3=no carrier; 2=ring; 0=OK
#
# PROGRAMMING NOTE: No blanks between double quote marks (").

condout:    send "AT&FQ0T\r"                    # Reset to factory defaults.
            ignore "0\r" or "OK\r\n" timeout 2  # Ignore modem response.
            send "ATE0T\r"                      # Initialize modem: Echo OFF,
            expect "0\r" or "OK\r\n" timeout 2  #  Enable responses (Numeric),
            send "ATQ0V0X0T\r"                  #  Limit response codes.
            expect "0\r" timeout 2              # Confirm commands successful.
            send "ATS0=0\r"                     # Set AutoAnswer OFF
```

```
            expect "0\r" timeout 2              # Confirm command successful.
            send "AT&C1&D2\r"                   # Detect carrier and DTR.
            expect "0\r" timeout 2              # Confirm command successful.
            done

connect:    send "ATDT%N\r"                     # Tone dialing command.
                                                # %N from Call Home setup.

                                                # Expect a connection response.
 expect "16\r" or "15\r" or "14\r" or "12\r" or "10\r" or "5\r" or "1\r" busy "7\r"
 timeout 60
            done

retry:      send "A/"                           # Repeat the previous command.

                                                # Expect a connection response.
 expect "16\r" or "15\r" or "14\r" or "12\r" or "10\r" or "5\r" or "1\r" busy "7\r"
 timeout 60
            done

disconnect:
            delay 2                             # Separate from previous data.
            send "+++"                          # Assure command mode.
            delay 2                             # Allow mode switching delay.
            send "ATH0T\r"                      # Set modem switch-hook down
                                                #  (i.e., hang up).
            ignore "0\r" or "OK\r" timeout 2    # Ignore modem response.
            send "ATE0Q1\r"                     # Initialize modem: Echo OFF,
                                                #  Disable responses.
            ignore "0\r" timeout 1
            done

condin:     send "AT&FQ0T\r"                    # Reset to factory defaults.
            ignore "0\r" or "OK\r\n" timeout 2  # Ignore modem response.
            send "ATE0T\r"                      # Initialize modem: Echo OFF,
            expect "0\r" or "OK\r\n" timeout 2  #  Enable responses (Numeric),
            send "ATQ0V0X0T\r"                  #  Limit response codes.
            expect "0\r" timeout 2              # Confirm commands successful.
            send "ATS0=2\r"                     # Set AutoAnswer ON
            expect "0\r" timeout 2              # Confirm command successful.
            send "AT&C1&D2\r"                   # Detect carrier and DTR.
            expect "0\r" timeout 2              # Confirm command successful.
            done

waitcall: ignore "2\r" timeout 1                # Ignore first ring.
          expect "2\r" timeout 10               # Pick up second ring
                                                #  or timeout.
                                                # Expect a connection response.
 expect "16\r" or "15\r" or "14\r" or "12\r" or "10\r" or "5\r" or "1\r"
 timeout 60
            done

page:       send "ATDT%N,,,,%R;\r"              # %N = pager call center number
                                                # Add enough commas to wait for
                                                #  time to enter paging number.
```

```
                                                # %R = paging number

                                                # Confirm successful command.
                expect "0\r" timeout 60
                delay 2                         # Wait before hanging up.
                send "ATH0T\r"                   # Hang up.
                expect "0\r" timeout 2          # Confirm successful command.
                done

ripo:           send "AT&FQ0T\r"                # Reset to factory defaults.
                ignore "0\r" or "OK\r\n" timeout 2  # Ignore modem response.
                send "ATE0T\r"                  # Initialize modem: Echo OFF,
                expect "0\r" or "OK\r\n" timeout 2  #  Enable responses (Numeric),
                send "ATQ0V0X0T\r"              #  Limit response codes.
                expect "0\r" timeout 2          # Confirm commands successful.
                send "ATS0=0\r"                 # Set AutoAnswer OFF
                expect "0\r" timeout 2          # Confirm command successful.
                send "AT&C1&D2\r"               # Detect carrier and DTR.
                expect "0\r" timeout 2          # Confirm command successful.
                done                            # RI Power On enabled.

error:                                          # Handle unexpected modem
                                                #  responses.
                expect "8\r" or "7\r" or "6\r" or "4\r" or "3\r"
                delay 2
                done
```

Sample File modem_f0.cfg

```
#
# COMPONENT_NAME: (ESPSETUP) ENTRY SERVICE PROCESSOR SETUP F0
#
# FUNCTIONS: Modem configuration file for many recent Hayes* compatible modems.
#  This example uses the AT&F0 reset command to choose the factory defaults.
#  This set up is preferred for modems with extended (&) commands.  For early
#  vintage modems, setup Z or Z0 is recommended.  If your modem responds to
#  the extended (&) commands and to factory default choices (&Fn), but doesn't
#  work properly with this setup file, setup F1 is recommended.
#
# * Trademark of Hayes Microcomputer Products, Inc.
#
# (C) COPYRIGHT International Business Machines Corp. 1996
# All Rights Reserved
# Licensed Materials - Property of IBM
#
# US Government Users Restricted Rights - Use, duplication or
# disclosure restricted by GSA ADP Schedule Contract with IBM Corp.
#
#
# If the modem has configuration switches, they should be set to the
# factory default settings.

ICDelay 1
DefaultTO 10
CallDelay 120
#  AT  Attention Code             ,   Inserts delay in dialing commands
# &F0  Reset. Restore profile 0 Q0   Turn on responses
#  E0  Turn echo off            Q1   Turn off responses
#  V0  Use numeric responses    S0=0 Automatic answer inhibit
# +++  Escape to command mode   S0=2 Answer on second ring
#  H0  Hang-up                  X0=0 Limit modem response codes
#                               T =  Tone mode.  When used as T\r, it is a
#                                    no op to maintain program synchronization
#                                    when modem may/will echo the commands.
#
# &C1  Detect CD                &D2  Respond to DTR (often the default)
# &R1  Ignore RTS (CTS)
#
#  %N  Call-Out phone number    %P   Paging phone number
#  %S  Modem speed (available to users)
#
# Following are common responses from a wide range of modems:
# 16, 15, 12, 10, 5 and 1 are connection responses.  Add others as required.
# 7=busy; 6=no dial tone; 4=error; 3=no carrier; 2=ring; 0=OK
#
# PROGRAMMING NOTE: No blanks between double quote marks (").

condout:    send "AT&F0Q0T\r"                   # Reset modem. Select profile 0
            ignore "0\r" or "OK\r\n" timeout 2  # Ignore modem response.
            send "ATE0T\r"                      # Initialize modem: Echo OFF,
            expect "0\r" or "OK\r\n" timeout 2  #  Enable responses (Numeric),
            send "ATQ0V0X0T\r"                  #  Limit response codes.
            expect "0\r" timeout 2              # Confirm commands successful.
```

```
            send "ATS0=0\r"                     # Set AutoAnswer OFF
            expect "0\r" timeout 2              # Confirm command successful.
            send "AT&C1&D2&R1\r"                # Detect carrier and DTR,
                                                #  Ignore RTS.
            expect "0\r" timeout 2              # Confirm command successful.
            done

connect:    send "ATDT%N\r"                     # Tone dialing command.
                                                # %N from Call Home setup.

                                                # Expect a connection response.
 expect "16\r" or "15\r" or "14\r" or "12\r" or "10\r" or "5\r" or "1\r" busy "7\r"
 timeout 60
            done

retry:      send "A/"                           # Repeat the previous command.

                                                # Expect a connection response.
 expect "16\r" or "15\r" or "14\r" or "12\r" or "10\r" or "5\r" or "1\r" busy "7\r"
 timeout 60
            done

disconnect:
            delay 2                             # Separate from previous data.
            send "+++"                          # Assure command mode.
            delay 2                             # Allow mode switching delay.
            send "ATH0T\r"                      # Set modem switch-hook down
                                                #  (i.e., hang up).
            ignore "0\r" or "OK\r" timeout 2    # Ignore modem response.
            send "ATE0Q1\r"                     # Initialize modem: Echo OFF,
                                                #  Disable responses.
            ignore "0\r" timeout 1
            done

condin:     send "AT&F0Q0T\r"                   # Reset modem. Select profile 0
            ignore "0\r" or "OK\r\n" timeout 2  # Ignore modem response.
            send "ATE0T\r"                      # Initialize modem: Echo OFF,
            expect "0\r" or "OK\r\n" timeout 2  #  Enable responses (Numeric),
            send "ATQ0V0X0T\r"                  #  Limit response codes.
            expect "0\r" timeout 2              # Confirm commands successful.
            send "ATS0=2\r"                     # Set AutoAnswer ON
            expect "0\r" timeout 2              # Confirm command successful.
            send "AT&C1&D2&R1\r"                # Detect carrier and DTR,
                                                #  Ignore RTS.
            expect "0\r" timeout 2              # Confirm command successful.
            done

waitcall: ignore "2\r" timeout 1                # Ignore first ring.
          expect "2\r" timeout 10               # Pick up second ring
                                                #  or timeout.
                                                # Expect a connection response.
 expect "16\r" or "15\r" or "14\r" or "12\r" or "10\r" or "5\r" or "1\r"
 timeout 60
            done
```

```
page:       send "ATDT%N,,,,%R;\r"              # %N = pager call center number
                                                # Add enough commas to wait for
                                                #  time to enter paging number.
                                                # %R = paging number

                                                # Confirm successful command.
            expect "0\r" timeout 60
            delay 2                             # Wait before hanging up.
            send "ATH0T\r"                       # Hang up.
            expect "0\r" timeout 2              # Confirm successful command.
            done

ripo:       send "AT&F0Q0T\r"                   # Reset modem. Select profile 0
            ignore "0\r" or "OK\r\n" timeout 2  # Ignore modem response.
            send "ATE0T\r"                      # Initialize modem: Echo OFF,
            expect "0\r" or "OK\r\n" timeout 2  #  Enable responses (Numeric),
            send "ATQ0V0X0T\r"                  #  Limit response codes.
            expect "0\r" timeout 2              # Confirm commands successful.
            send "ATS0=0\r"                     # Set AutoAnswer OFF
            expect "0\r" timeout 2              # Confirm command successful.
            send "AT&C1&D2&R1\r"                # Detect carrier and DTR,
                                                #  Ignore RTS.
            expect "0\r" timeout 2              # Confirm command successful.
            done                                # RI Power On enabled.

error:                                          # Handle unexpected modem
                                                #  responses.
            expect "8\r" or "7\r" or "6\r" or "4\r" or "3\r"
            delay 2
            done
```

Sample File modem_f1.cfg

```
#
# COMPONENT_NAME: (ESPSETUP) ENTRY SERVICE PROCESSOR SETUP F1
#
# FUNCTIONS: Modem configuration file for many recent Hayes* compatible modems.
#  This example uses the AT&F1 reset command to choose the factory defaults.
#  This set up is for modems with extended (&) commands and which do not work
#  properly with setup F0.  For early vintage modems, setup Z or Z0 is
#  recommended.
#
# * Trademark of Hayes Microcomputer Products, Inc.
#
# (C) COPYRIGHT International Business Machines Corp. 1996
# All Rights Reserved
# Licensed Materials - Property of IBM
#
# US Government Users Restricted Rights - Use, duplication or
# disclosure restricted by GSA ADP Schedule Contract with IBM Corp.
#
#
# If the modem has configuration switches, they should be set to the
# factory default settings.

ICDelay 1
DefaultTO 10
CallDelay 120
#  AT  Attention Code            ,   Inserts delay in dialing commands
# &F1  Reset. Restore profile 1 Q0   Turn on responses
#  E0  Turn echo off            Q1   Turn off responses
#  V0  Use numeric responses    S0=0 Automatic answer inhibit
# +++  Escape to command mode   S0=2 Answer on second ring
#  H0  Hang-up                  X0=0 Limit modem response codes
#                               T =  Tone mode.  When used as T\r, it is a
#                                    no op to maintain program synchronization
#                                    when modem may/will echo the commands.
#
# &C1  Detect CD                &D2  Respond to DTR (often the default)
# &R1  Ignore RTS (CTS)
#
#  %N  Call-Out phone number    %P   Paging phone number
#  %S  Modem speed (available to users)
#
# Following are common responses from a wide range of modems:
# 16, 15, 12, 10, 5 and 1 are connection responses.  Add others as required.
# 7=busy; 6=no dial tone; 4=error; 3=no carrier; 2=ring; 0=OK
#
# PROGRAMMING NOTE: No blanks between double quote marks (").

condout:    send "AT&F1Q0T\r"                   # Reset modem. Select profile 1
            ignore "0\r" or "OK\r\n" timeout 2  # Ignore modem response.
            send "ATE0T\r"                      # Initialize modem: Echo OFF,
            expect "0\r" or "OK\r\n" timeout 2  #  Enable responses (Numeric),
            send "ATQ0V0X0T\r"                  #  Limit response codes.
            expect "0\r" timeout 2              # Confirm commands successful.
            send "ATS0=0\r"                     # Set AutoAnswer OFF
```

```
            expect "0\r" timeout 2              # Confirm command successful.
            send "AT&C1&D2&R1\r"                # Detect carrier and DTR,
                                                #  Ignore RTS.
            expect "0\r" timeout 2              # Confirm command successful.
            done

connect:    send "ATDT%N\r"                     # Tone dialing command.
                                                # %N from Call Home setup.

                                                # Expect a connection response.
 expect "16\r" or "15\r" or "14\r" or "12\r" or "10\r" or "5\r" or "1\r" busy "7\r"
 timeout 60
            done

retry:      send "A/"                           # Repeat the previous command.

                                                # Expect a connection response.
 expect "16\r" or "15\r" or "14\r" or "12\r" or "10\r" or "5\r" or "1\r" busy "7\r"
 timeout 60
            done

disconnect:
            delay 2                             # Separate from previous data.
            send "+++"                          # Assure command mode.
            delay 2                             # Allow mode switching delay.
            send "ATH0T\r"                      # Set modem switch-hook down
                                                #  (i.e., hang up).
            ignore "0\r" or "OK\r" timeout 2    # Ignore modem response.
            send "ATE0Q1\r"                     # Initialize modem: Echo OFF,
                                                #  Disable responses.
            ignore "0\r" timeout 1
            done

condin:     send "AT&F1Q0T\r"                   # Reset modem. Select profile 1
            ignore "0\r" or "OK\r\n" timeout 2  # Ignore modem response.
            send "ATE0T\r"                      # Initialize modem: Echo OFF,
            expect "0\r" or "OK\r\n" timeout 2  #  Enable responses (Numeric),
            send "ATQ0V0X0T\r"                  #  Limit response codes.
            expect "0\r" timeout 2              # Confirm commands successful.
            send "ATS0=2\r"                     # Set AutoAnswer ON
            expect "0\r" timeout 2              # Confirm command successful.
            send "AT&C1&D2&R1\r"                # Detect carrier and DTR,
                                                #  Ignore RTS.
            expect "0\r" timeout 2              # Confirm command successful.
            done

waitcall: ignore "2\r" timeout 1                # Ignore first ring.
          expect "2\r" timeout 10               # Pick up second ring
                                                #  or timeout.
                                                # Expect a connection response.
 expect "16\r" or "15\r" or "14\r" or "12\r" or "10\r" or "5\r" or "1\r"
 timeout 60
            done

page:       send "ATDT%N,,,,%R;\r"              # %N = pager call center number
```

```
                                        # Add enough commas to wait for
                                        #  time to enter paging number.
                                        # %R = paging number

                                        # Confirm successful command.
            expect "0\r" timeout 60
            delay 2                     # Wait before hanging up.
            send "ATH0T\r"               # Hang up.
            expect "0\r" timeout 2      # Confirm successful command.
            done

ripo:       send "AT&F1Q0T\r"           # Reset modem. Select profile 1
            ignore "0\r" or "OK\r\n" timeout 2  # Ignore modem response.
            send "ATE0T\r"              # Initialize modem: Echo OFF,
            expect "0\r" or "OK\r\n" timeout 2  #  Enable responses (Numeric),
            send "ATQ0V0X0T\r"          #  Limit response codes.
            expect "0\r" timeout 2      # Confirm commands successful.
            send "ATS0=0\r"             # Set AutoAnswer OFF
            expect "0\r" timeout 2      # Confirm command successful.
            send "AT&C1&D2&R1\r"        # Detect carrier and DTR,
                                        #  Ignore RTS.
            expect "0\r" timeout 2      # Confirm command successful.
            done                        # RI Power On enabled.

error:                                  # Handle unexpected modem
                                        #  responses.
            expect "8\r" or "7\r" or "6\r" or "4\r" or "3\r"
            delay 2
            done
```

Appendix F. Interpreting Firmware Error Codes

The error code is an 8-character (4-byte) hexadecimal code produced by firmware to identify the potential failing function or FRU in a system. The code consists of 5 source code characters and 3 reason code characters. Individual characters within the error code have specific field definitions, as defined in the following tables.

Table 6. Service Reference Code Field Layout

Source Code				Reason Code			
Byte 0		Byte 1		Byte 2		Byte 3	
S1	S2	S3	S4	S5	R1	R2	R3

Table 7. Service Reference Code Field Descriptions

Field	Description
S1	Maintenance Package Source that produced the error code. **0** Reserved **1** Reserved **2** POST, firmware **3** BIST **4** Service processor, base system controller, etc. **5** Reserved **8** Product-specific service guide, MAPs **9** Reserved **A-F** Reserved
S2	Base class
S3-S4	Sub-class
S5	Unique version of the device/FRU type for a particular product.
R1	Device/FRU unique failure reason codes. **1-7** Use in combination with R2, R3 for diagnostic test failure when maximum isolation was obtained. **8-9** Use in combination with R2, R3 for diagnostic test failure when maximum isolation was *not* obtained. **A** Log analysis of POST error log **B** Log analysis of machine check or checkstop error log **C** Reserved **D** Diagnostic detected missing resource **E-F** Reserved
R2 - R3	Device/FRU unique failure reason codes.

Table 8. Current PCI 2.1 Class Code Definition

PCI Base Class (lower nibble) S2	PCI Sub-Class S3 -S4	Description
0	Devices that were built before the class code field was defined.	
	00	All currently implemented devices except VGA-compatible devices.
	01	VA-compatible devices
1	Mass storage controller	
	00	SCSI bus controller
	01	IDE controller
	02	Floppy disk controller
	03	Intelligent Peripheral Interface (IPI) bus controller
	04	Redundant Array of Independent Disk (RAID) controller
	80	Other mass storage controller
2	Network controller	
	00	Ethernet controller
	01	Token Ring controller
	02	FDDI controller
	03	ATM controller
	80	Other network controller
3	Display controller	
	00	VGA-Compatible controller
	01	Extended Graphics Array (XGA) controller
	80	Other display controller
4	Multimedia device	
	00	Video device
	01	Audio device
	80	Other multimedia device
5	Memory controller	
	00	RAM
	01	Flash
	80	Other memory controller

Table 8. Current PCI 2.1 Class Code Definition (continued)

6	Bridge devices	
	00	Host bridge
	01	ISA bridge
	02	EISA bridge
	03	MCA bridge
	04	PCI-to-PCI bridge
	05	PCMCIA bridge
	06	NuBus bridge
	07	Cardbus bridge
	80	Other bridge device
7	Simple communication controllers	
	00	Serial controllers
	01	Parallel port
	80	Other communication controllers
8	Generic system peripherals	
	00	PIC
	01	DMA controller
	02	System timer
	03	Real-Time Clock (RTC) controller
	80	Other system peripherals
9	Input devices	
	00	Keyboard controller
	01	Digitizer (pen)
	02	Mouse controller
	80	Other input controllers
A	Docking stations	
	00	Generic docking station
	80	Other type of docking station
B	Processors	
	00	Reserved
	01	Reserved
	02	Reserved
	10	Reserved
	20	Power PC
	40	Co-processor

Table 8. Current PCI 2.1 Class Code Definition (continued)

C	Serial bus controllers	
	00	FireWire (IEEE 1394)
	01	ACCESS.bus
	02	Serial Storage Architecture (SSA)
	03	Universal Serial Bus (USB)
	04	Fiber channel

Table 9. S2-S3-S4 Definition for devices/FRUs not defined in the PCI specification

Base Class S2	**Sub-Class S3 - S4**	**Description**
0	10	AC Power
	11	DC Power
	20	Temperature-Related Problem
	21	Fans
	30-3x	Cables
	40-4x	Terminators
	50	Operator panels
	60-6x	Reserved
	70-7x	Reserved
	90-9x	Reserved
	A0	ROS Heartbeat
	B0	O/S Heartbeat
	D0	Unknown device
	E0	Security
1	A0	SCSI Drivers (generic)
	B0	IDE Drives
	C0	RAID Drives
	D0	SSA Drives
	E0	Tapes SCSI
	E1	Tapes IDE
	ED	SCSI changer
	EE	Other SCSI device
	EF	Diskette drive
	F0	CD-ROM SCSI
	F1	CD-ROM IDE
	F2	Read/Write optical SCSI
	F3	Read/Write optical IDE
	F4 - FF	TBD media devices

Table 9. S2-S3-S4 Definition for devices/FRUs not defined in the PCI specification (continued)

Base Class S2	Sub-Class S3 - S4	Description
5	A0	L2 Cache Controller including integrated SRAM
	A1	L2 Cache SRAM
	A8	NVRAM
	A9	CMOS
	AA	Quartz/EEPROM
	B0 - Bx	Memory cards
	Cyy	Memory DIMMs (Where C is S2, S3, or S4 and yy identifies the memory size and type).
7	A0	I^2C bus
8	A0	Power Management Functions
9	A0 - Ax	Keyboards
	B0 - Bx	Mouse(s)
	C0 - Cx	Dials
	D0	Tablet
	D1 - Dx	TBD input devices
B	A0	Service processor

Index

A

about this book xvii
account number 172
adapters
  Removal and Replacement 242
AIX location codes 10, 13

B

battery
  disposal, recycling 283
battery removal and replacement 248
boot list 148
boot problems 89
  boot problems 89
bus SRN to FRU Table 143

C

cables
  power 19
call out 180
call-in
  testing 290
call-in security 176
call-out 172
  policy 172
  testing 290
check points 164
checkpoints 22, 71
  firmware 75
  service processor 71
checkpoints, description 22
configuration
  config 190
  multiboot 191
console mirroring
  enable/disable 155
  quick disconnect 181
  system configuration 181
covers
  removing and replacing 226
customer administration center 170

D

diagnostics overview 21
diagnostics, online 147
diagnostics, standalone 147
disk drive cage
  removing and replacing 266
disk drives
  configuration 247
  deconfiguration 247
  removing and replacing 244

E

Electronic Service Agent feature 24
entry MAP 21
EPROM
  updates 157, 181
error code to FRU index 94
error codes
  firmware 94, 315
  POST 94

F

firmware updates 287
front fan
  removing and replacing 265
FRU isolation 23

G

general access password, changing 155
general user menus 152
graphical system management services 187

H

heartbeat 179

I

I/O board
  component locations 4
  removing and replacing 254
index, error code to FRU 94
ISO 9000 xvii
isolation, FRU 23

K

keyboards 276, 278

L

language selection 167
laser compliance statement xii
laser safety information xii
loading the system diagnostics 147
location codes 9, 13
  AIX 10
  format 9
  physical 9
locations
  memory 7
  system unit 1
locations, components
  I/O board 4
  operator panel 8
  system board 7

M

maintenance analysis procedures 21
maintenance analysis procedures (MAPs) 27
  memory problem resolution MAP 39
  minimum configuration Map 50
  power MAP 45
  problem determination MAP 34
  quick entry MAP 27
media drives
  removing and replacing 268
memory bits 142
memory card
  removing and replacing 232
memory card locations 7
memory module
  removing and replacing 236
memory problem resolution MAP 39
menus
  general user 152
  privileged user 153
  service processor 151
  service processor call-in/call-out setup 167
  service processor call-out policy setup 171
  service processor customer account setup 172
  service processor language selection 167
  service processor menus
    SMS 149
  service processor reboot policy setup 160
  service processor serial port selection 168
  service processor serial port snoop setup 158
  service processor serial port speed setup 169
  service processor setup 154
  service processor system information 164
  service processor system power control 159
  service processor telephone setup 169
  support menus
    service processor service aids 149
messages, SP checkpoints 71
minimum configuration Map 50
minimum configuration MAP 21
modem
  configuration file selection 293
  configurations 293
  transfer 297
modem_f.cfg, sample file 306
modem_f0.cfg, sample file 309
modem_f1.cfg, sample file 312
modem_z.cfg, sample file 300
modem_z0.cfg, sample file 303
multiboot 191

N

notices
  laser compliance statement xii

O

online diagnostics 147
online publications xvii
operational phases, SP
  standby 183
operator panel
  component locations 8
  removing and replacing 260
optical disk
  laser compliance statement xii
overview, diagnostics 21

P

pager 170
parts
  keyboard 276, 278
parts information 271
password 195
passwords
  changing General-Access password 155
  changing privileged-access password 155
  overview 155
physical location codes 9, 13
POST error codes 94
POST errors
  read 152
power cables 19
power MAP 21, 45
power supply
  removing and replacing 257
power-on methods 175
preface xvii
primary console 299
privileged user menus 153
privileged-access password 197
privileged-access password, changing 155
problem determination MAP 21, 34
processor and memory card cover
  removing and replacing 231
processor card
  removing and replacing 239
product disposal 283
progress indicators 152, 164
publications, online xvii

Q

quick entry MAP 21, 27

R

read system, POST errors 152, 165
rear fan
  removing and replacing 264
reboot recovery 160, 176
recycling 283

reference information
information, reference 1
related publications xvii
remote latency 171
remote mode 197
remote timeout 171
removal and replacement procedures 223
removing procedures
adapters 242
battery 248
CEC fan 264
covers 226
disk drive cage 266
disk drives 245
I/O board 254
I/O fan 265
media drives 268
memory cards 232
memory modules 236
operator panel 260
power supply 257
processor and memory cover 231
processor card 239
system board 252
Replacement card
processor card 240
replacing procedures
adapters 242
CEC fan. 264
covers 230
disk drive cage 267
disk drives 246
I/O board 256
I/O fan. 265
media drives 268
memory cards 233
memory modules 238
operator panel 261
power supply 259
processor and memory cover 231
system board 253
reset service processor 157
restart recovery 160, 176
RETAIN 172
retries 171
ring indicator power-on 159

S

safety xi
laser compliance statement xii
saving service processor settings 289
security, call-in 176
service center 169
service inspection guide 20
service mode
service processor procedures 185
service processor 151
backup settings 289
checklist 289
operational phases 183
setup 289
setup checklist 289
test 289
service processor call-in security 176
service processor checkpoints 71
service processor feature 24
service processor menu inactivity 151
service processor menus
accessing locally 151
accessing remotely 151
call-in/call-out 167
call-out policy 171
customer account 172
general user 152
language selection 167
menu inactivity 151
privileged user 153
reboot policy 160
restart policy 160
serial port selection 168
Serial Port Snoop Setup Menu 158
serial port speed setup 169
setup menu 154
supported menu options 150
system information 164
system power control 159
telephone number 169
service processor procedures in service mode 185
service provider 169
SP checkpoints 71
specifications, system unit 17
standalone diagnostics 147
start talk mode 155
static-sensitive devices, handling 224
STBY 183
stopping the system unit 224
surveillance
failure 179
operating system 179
set parameters 157
system firmware 179
system administrator 170
system board
component locations 7
removing and replacing 252
system cables 9
system firmware updates 287
system information menu 164
system management services 187

system management services *(continued)*
display configuration 210
graphical 187
password 195
power-on password 195
privileged-access password 197
select language 221
text-based system management services 209
utilities 193, 214
system phone number 170
system POST errors
read 152
system power-on methods 175
system unit
stopping 224
system unit locations 1

T

testing the setup
call-in 290
call-out 290
text-based system management services 209
trademarks xviii
transfer of a modem session 297

U

unattended start mode, enable/disable 159
using Electronic Service Agent 24
using service processor 24
using the service processor
service processor menus
SMS 149
support menus
service processor service aids 149
utilities 193

V

voice phone number 170

Readers' Comments — We'd Like to Hear from You

RS/6000 44P Series Model 270
Service Guide

Publication No. SA38-0572-02

Overall, how satisfied are you with the information in this book?

	Very Satisfied	Satisfied	Neutral	Dissatisfied	Very Dissatisfied
Overall satisfaction	☐	☐	☐	☐	☐

How satisfied are you that the information in this book is:

	Very Satisfied	Satisfied	Neutral	Dissatisfied	Very Dissatisfied
Accurate	☐	☐	☐	☐	☐
Complete	☐	☐	☐	☐	☐
Easy to find	☐	☐	☐	☐	☐
Easy to understand	☐	☐	☐	☐	☐
Well organized	☐	☐	☐	☐	☐
Applicable to your tasks	☐	☐	☐	☐	☐

Please tell us how we can improve this book:

Thank you for your responses. May we contact you? ☐ Yes ☐ No

When you send comments to IBM, you grant IBM a nonexclusive right to use or distribute your comments in any way it believes appropriate without incurring any obligation to you.

Name _____ Address _____

Company or Organization _____

Phone No. _____

Readers' Comments — We'd Like to Hear from You
SA38-0572-02

Cut or Fold
Along Line

Fold and Tape **Please do not staple** Fold and Tape

NO POSTAGE
NECESSARY
IF MAILED IN THE
UNITED STATES

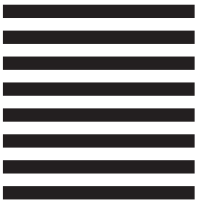

BUSINESS REPLY MAIL

FIRST-CLASS MAIL PERMIT NO. 40 ARMONK, NEW YORK

POSTAGE WILL BE PAID BY ADDRESSEE

Information Development
Department H6DS-905-6C006
11501 Burnet Road
Austin, TX 78758-3493

Fold and Tape **Please do not staple** Fold and Tape

SA38-0572-02

Cut or Fold
Along Line

Printed in USA

September 2001

SA38-0572-02

Spine information:

RS/6000 44P Series Model 270

Service Guide

SA38-0572-02